Operating instructions

Firewood boiler S4 Turbo (F)

Translation of original German version of operating instructions for operators.

Read and follow all instructions and safety instructions.
All errors and omissions excepted.

B1510824_en | Edition 03/06/2024

1 General ... 4
1.1 Operating principle ... 4
1.2 S4 Turbo Product Overview ... 5
2 Safety ... 6
2.1 Hazard levels of warnings ... 6
2.2 Pictograms used ... 7
2.3 General safety information ... 8
2.4 Permitted uses ... 9
2.4.1 The Clean Air Act 1993 and Smoke Control Areas ... 9
2.4.2 Permitted fuels ... 9
2.4.3 Fuels permitted under certain conditions ... 11
2.4.4 Non-permitted fuels ... 12
2.5 Qualification of operating staff ... 12
2.6 Protective equipment for operating staff ... 12
2.7 Safety devices ... 13
2.8 Residual risks ... 14
2.9 Emergency procedure ... 16
2.9.1 Overheating of the system ... 16
2.9.2 Smell of flue gas ... 16
2.9.3 Power failure / induced draught fan failure ... 16
2.9.4 Fire in the system ... 17
3 Notes for operating a heating system ... 18
3.1 Installation and approval ... 18
3.2 Installation site ... 18
3.3 Combustion air ... 19
3.3.1 General requirement ... 19
3.3.2 Room air-independent operation ... 19
3.4 Domestic hot water ... 20
3.5 Pressure maintenance systems ... 23
3.6 Return lift ... 24
3.7 Combination with storage tank ... 24
3.8 Chimney connection/chimney system ... 24
4 Operating the System ... 25
4.1 Assembly and initial startup ... 25
4.2 Switching on the power supply ... 26
4.3 Before heating up the boiler ... 26
4.3.1 Clean the heat exchanger pipes ... 26
4.3.2 Check the igniter tube (for automatic ignition) ... 26
4.3.3 Reloading intervals when operating with storage tank ... 27
4.3.4 Reload quantity calculation ... 28
4.3.5 Determining the right amount of fuel ... 29
4.3.6 Reloading intervals when operating without storage tank or if the storage tank is too small ... 30
4.4 Filling the boiler with firewood ... 31
4.5 Heat up firewood manually ... 33
4.6 Heat up the firewood with automatic ignition ... 33
4.7 Operate the boiler using the touch display ... 35
4.7.1 Overview of the touch display ... 35
4.7.2 Select information displays ... 41
4.7.3 Change boiler mode ... 43
4.7.4 Change date and time ... 43

4.7.5 Change desired DHW tank temperature ... 44
4.7.6 One-time extra loading of an individual DHW tank ... 44
4.7.7 One-time extra loading of all existing DHW tanks ... 44
4.7.8 Setting the heating curve for a heating circuit ... 45
4.7.9 Change room temperature (heating circuit without room temperature sensor) ... 46
4.7.10 Change room temperature (heating circuit with room temperature sensor) ... 47
4.7.11 Switch heating circuit mode ... 47
4.7.12 Lock display/switch user level ... 48
4.7.13 Change the name of the components ... 48
4.7.14 Configure the holiday program ... 49
4.8 Reloading firewood ... 51
4.9 Switching off the power supply ... 51
4.10 Checking the ash level in the boiler ... 52
4.10.1 Emptying ash ... 52
4.10.2 Cleaning the grating ... 53
5 Servicing the system ... 54
5.1 General information on servicing ... 54
5.2 Required tools ... 55
5.3 Maintenance work by the operator ... 56
5.3.1 Inspection ... 56
5.3.2 Periodic inspection and cleaning ... 57
5.3.3 Maintenance of the electrostatic particle separator in the flue gas line (optional) ... 67
5.4 Maintenance work by technicians ... 68
5.4.1 Cleaning the Lambda probe ... 69
5.5 Emissions measurement by chimney sweep or regulatory body ... 71
5.5.1 General information on measurement ... 71
5.5.2 Create the measurement conditions and perform the measurement ... 72
5.6 Replacement parts ... 73
5.7 Disposal information ... 73
5.7.1 Disposal of the ash ... 73
5.7.2 Disposal of system components ... 73
6 Troubleshooting ... 74
6.1 General fault with power supply ... 74
6.1.1 Behaviour of system after a power failure ... 74
6.2 Extra cleaning of flue gas paths ... 74
6.3 Excessive temperature ... 75
6.4 Faults with fault message ... 75
6.4.1 Procedure for fault messages ... 76

1 General

Thank you for choosing a quality product from Froling. The product features a state-of-the-art design and conforms to all currently applicable standards and testing guidelines.

Please read and observe the documentation provided and always keep it close to the system for reference. Observing the requirements and safety information in the documentation makes a significant contribution to safe, appropriate, environmentally friendly and economical operation of the system.

The constant further development of our products means that there may be minor differences from the pictures and content. If you discover any errors, please let us know: doku@froeling.com.

Subject to technical change.

Warranty and Guarantee Conditions

Our sale and delivery conditions will be applicable. These conditions have been made available to customers, and customers have been made aware of them at the time of order completion.

You can also find the guarantee conditions on the enclosed guarantee certificate.

1.1 Operating principle

The Fröling S4 Turbo is a wood boiler for the non-condensing combustion of firewood. The fuel loading chamber is filled with fuel via the fuel loading door located behind the heat insulated door on the front of the boiler. The combustion grate, through which the combustion gases are sucked into the combustion chamber by the induced draught fan, is located below the fuel loading chamber. When the induced draught fan is used, the combustion air around the pre-heating chamber door is sucked in and channelled to the fuel via regulating flaps on the side air boxes (primary and secondary air). The boiler water and flue gas temperature are regulated by the induced draught fan. The primary air is used to adjust the boiler to the fuel and set the required output. The secondary air is used to set the combustion performance by way of the Lambda probe and servo-motor. The flue gas travels through the heat exchanger to the flue gas outlet. In order to optimise heat transfer and for cleaning purposes, the heat exchanger pipes are fitted with an Efficiency Optimisation System (WOS), which can be operated using a lever or activated via a drive. The ash deposits at the bottom of the combustion chamber and below the heat exchanger pipes can be removed via the combustion chamber door on the front of the boiler.

1.2 S4 Turbo Product Overview

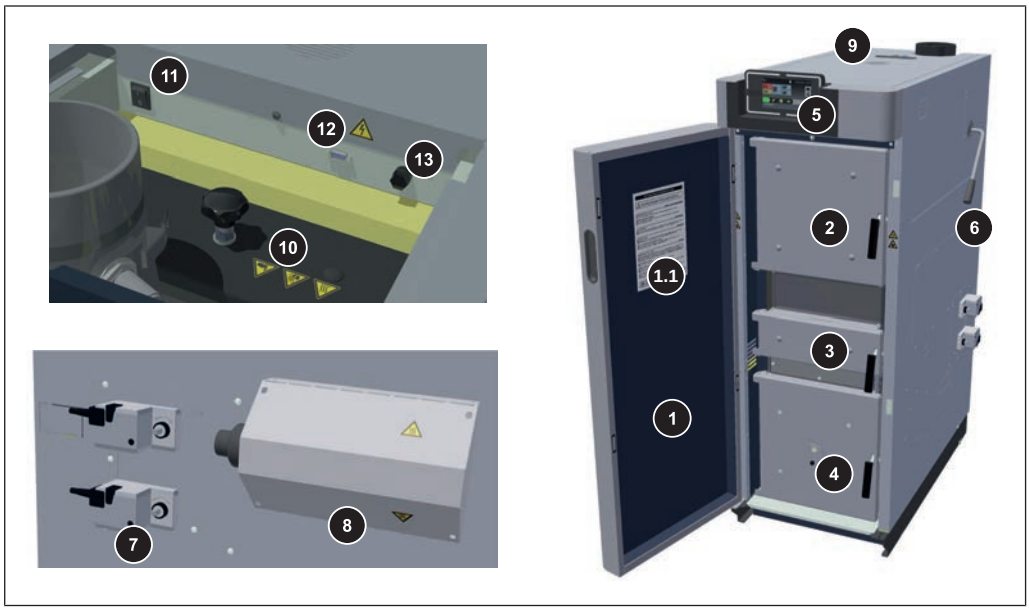

1	Insulated door
1.1	Maintenance overview
2	Fuel loading door
3	Pre-heating chamber door
4	Combustion chamber door with inspection glass
5	Lambdatronic S 3200 control, ➲ "Overview of the touch display" [▶ 35]
6	Lever for heat exchanger cleaning system (WOS)
7	Actuators for automatic regulation of primary and secondary air
8	Automatic ignition (optional)
9	Back insulating cover
10	Heat exchanger cover: Maintenance opening for cleaning the WOS system and heat exchanger
11	Main switch
12	Service port
13	STL high-limit thermostat

2 Safety

2.1 Hazard levels of warnings

This documentation uses warnings with the following hazard levels to indicate direct hazards and important safety instructions:

⚠ DANGER

The dangerous situation is imminent and if measures are not observed it will lead to serious injury or death. You must follow the instructions!

⚠ WARNING

The dangerous situation may occur and if measures are not observed it will lead to serious injury or death. Work with extreme care.

⚠ CAUTION

The dangerous situation may occur and if measures are not observed it will lead to minor injuries.

NOTICE

The dangerous situation may occur and if measures are not observed it will lead to damage to property or pollution.

2.2 Pictograms used

The following symbols are used in the documentation and/or on the boiler to show what is required and forbidden and to give warnings.

In accordance with the Machinery Directive, signs fitted directly within the danger area of the boiler indicate immediate hazards or safety procedures. These stickers must not be removed or covered.

	Refer to the operating instructions		Wear safety shoes
	Wear protective gloves		Turn off the main switch
	Keep the doors closed		

	Unauthorised access prohibited

	Warning - hot surface		Warning - hazardous electrical voltage
	Warning - hazardous or irritant materials		Warning - automatic boiler startup
	Warning of injury to fingers or hands, automatic fan		

2.3 General safety information

⚠ DANGER

If the device is used incorrectly:

Incorrect use of the system can cause severe injury and damage.

When operating the system:

- ❒ Observe the instructions and information in the manuals
- ❒ Observe the details on procedures for operation, maintenance and cleaning, as well as troubleshooting in the respective manuals.
- ❒ Any work above and beyond this (e.g. servicing) must be carried out by a heating engineer approved by Fröling Heizkessel- und Behälterbau GesmbH or by Froling customer services

⚠ WARNING

External influences:

Negative external influences, such as insufficient combustion air or non-standard fuel, can cause serious faults in combustion (e.g. spontaneous combustion of carbonisation gases or flash fires) which can in turn cause serious accidents!

When operating the boiler, please note the following:

- ❒ Instructions and information regarding versions and minimum values, as well as standards and guidelines for heating components in the instructions must be observed.

⚠ WARNING

Severe injuries and damage can be caused by an inadequate flue gas system.

Problems with the flue gas system, such as poor cleaning of the flue pipe or insufficient chimney draught, can cause serious faults in combustion (such as spontaneous combustion of carbonisation gases or flash fires).

Take the following precautions:

- ❒ Optimum boiler performance can only be guaranteed if the flue gas system is functioning correctly.

2.4 Permitted uses

The Froling Firewood boiler S4 Turbo is designed solely for heating domestic water. Only the fuels specified in the "Permitted fuels" section may be used.

➲ "Permitted fuels" [▶ 9]

The unit should only be operated when it is in full working order. It must be operated in accordance with the instructions, observing safety precautions, and you should ensure you are aware of the potential hazards. The inspection and cleaning intervals in the operating instructions must be observed. Ensure that any faults which might impair safety are rectified immediately.

The manufacturer or supplier is not liable for any damage resulting from non-permitted uses.

Only original spare parts or specific alternative spare parts authorised by the manufacturer may be used. Any kind of change or modification made to the product will invalidate the manufacturer's conformity with the applicable guideline(s). In such cases, the product will need to undergo new hazard evaluation procedures by the operator. The operator will then be fully responsible for the declaration of conformity according to the valid guideline(s) for the product and will need to issue a corresponding declaration for the device. This person will then assume all of the rights and responsibilities of a manufacturer.

2.4.1 The Clean Air Act 1993 and Smoke Control Areas

Under the Clean Air Act local authorities may declare the whole or part of the district of the authority to be a smoke control area. It is an offence to emit smoke from a chimney of a building, from a furnance or from any fixed boiler if located in a designated smoke control area. It is also an offence to acquire an „unauthorised fuel“ for use within a smoke control area unless it is used in an „exempt“ appliance („exempted“ from the controls which generally apply in the smoke control area). The Secretary of State for Environment, Food and Rural Affairs has powers under the Act to authorise smokeless fuels or exempt appliances for use in smoke control areas in England. In Scotland and Wales this power rests with Ministers in the devolved administrations for those countries. Separate legislation, the Clean Air (Northern Ireland) Order 1981, applies in Northern Ireland. Therefore it is a requirement that fuels burnt or obtained for use in smoke control areas have been „authorised“ in Regulations and that appliances used to burn solid fuel in those areas (other than „authorised“ fuels) have been exempted by an Order made and signed by the Secretary of State or Minister in the devolved administrations.

Further information on the requirements of the Clean Air Act can be found here: http://smokecontrol.defra.gov.uk

Your local authority is responsible for implementing the Clean Air Act 1993 including designation and supervision of smoke control areas and you can contact them for details of Clean Air Act requirements.

The Froling S4 Turbo 22, S4 Turbo 28, S4 Turbo 34, S4 Turbo 40, S4 Turbo 50 and S4 Turbo 60 have been recommended as suitable for use in smoke control areas when burning fuels as listed under "Permitted fuels".

2.4.2 Permitted fuels

Firewood

Firewood up to max. 55 cm long.

Water content	Water content (w) greater than 15% (equivalent to wood moisture u > 17%) Water content (w) less than 25% (equivalent to wood moisture u < 33%)

Note on standards

EU:	Fuel as per EN ISO 17225 – Part 5: Firewood class A2 / D15 L50
Additional for Germany:	Fuel class 4 (§3 of the First Federal Emissions Protection Ordinance (BimSchV) in the last amended version)

Tips for storing wood

- Use wind-exposed areas where possible for storage (e.g. store at edge of forest instead of in forest)
- Walls of buildings facing the sun are ideal
- Create a dry underlay, where possible with air access (line with round timber, pallets, etc.)
- stack split wood and store in such a way that it is protected from the elements
- If possible, stock fuel for the day in a warm place (e.g. in boiler room) (pre-heats the fuel!)

Storage time dependent upon water content

	Wood type	Water content	
		15 – 25%	less than 15 %
Storage in heated and ventilated room (approx. 20°C)	Soft wood (e.g. spruce)	approx. 6 months	from 1 year
	Hardwood (e.g. beech)	1 – 1.5 years	from 2 years
Outdoor storage (protected from elements, exposed to wind)	Soft wood (e.g. spruce)	2 summers	from 2 years
	Hardwood (e.g. beech)	3 summers	from 3 years

Freshly cut wood has an approximate water content of 50 to 60% depending on when it was harvested. As the above table shows, the water content of the firewood decreases the longer the wood is stored depending on how dry and warm the storage location is. The ideal water content of firewood is between 15 and 25%. If the water content falls below 15%, we recommend you adjust the combustion control to the fuel.

The air duct should be adjusted accordingly for optimal burning of these fuels (w < 15%).
➲ "Extra cleaning of flue gas paths" [▶ 74]

2.4.3 Fuels permitted under certain conditions

Wood briquettes

Wood briquettes for non-industrial use with a diameter of 5-10 cm and 5-50 cm long.

Note on standards

EU:	Fuel as per EN ISO 17225 - Part 3: wood briquettes class B / D100 L500 Form 1 - 3
Additional for Germany:	Fuel class 5a (§3 of the First Federal Emissions Protection Ordinance (BImSchV) - applicable version)

Notes on use

- When burning wood briquettes use the settings for extremely dry fuel
- Wood briquettes must be heated up with firewood as per EN ISO 17225-5 (at least two layers of firewood under the wood briquettes)
- The fuel loading chamber must not be filled more than 3/4 full, as the wood briquettes expand during combustion
- Even when using the settings for dry fuel, burning wood briquettes can cause combustion problems. In such cases, repairs must be carried out by qualified staff. Please contact Froling customer services or your installer.

2.4.4 Non-permitted fuels

The use of fuels other than those defined in the "Permitted fuels" section, and particularly the burning of refuse, is not permitted

NOTICE

In case of use of non-permitted fuels:

Burning non-permitted fuels increases the cleaning requirements and leads to a build-up of aggressive sedimentation and condensation, which can damage the boiler and also invalidates the guarantee! Using non-standard fuels can also lead to serious problems with combustion!

For this reason, when operating the boiler:

❒ Use only the permitted fuels

2.5 Qualification of operating staff

⚠ CAUTION

If unauthorised persons enter the Installation room / boiler room:

Risk of personal injury and damage to property

❒ The operator is responsible for keeping unauthorised persons, in particular children, away from the system.

Only trained operators are permitted to operate the unit. The operator must also have read and understood the instructions in the documentation.

2.6 Protective equipment for operating staff

You must ensure that staff have the protective equipment specified by accident prevention regulations!

- For operation, inspection and cleaning:
  - suitable work wear
  - protective gloves
  - sturdy shoes
  - dust mask

2.7 Safety devices

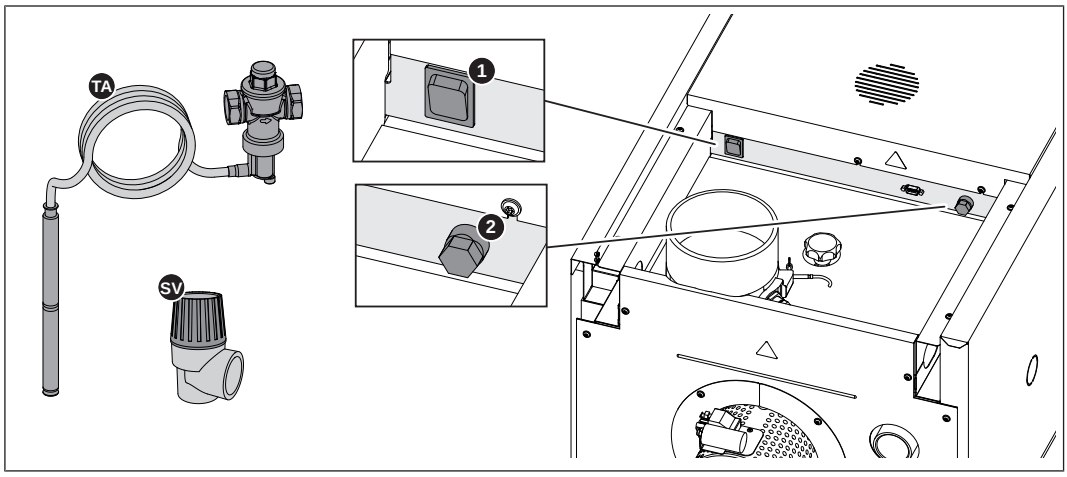

TA	**THERMAL DISCHARGE VALVE** *(protection against overheating)* The thermal discharge valve opens at approx. 100°C and feeds cold water to the safety heat exchanger to lower the boiler temperature
SV	**SAFETY VALVE** *(protection against overheating/excess pressure)* When the boiler pressure reaches a maximum of 3 bar, the safety valve opens and the heated water is blown off in the form of steam.
1	**MAIN SWITCH** *(switches off the power supply)* For shutting down the entire system ❒ The power to all components is switched off. ↳ **WARNING!** Only switch off the boiler when the fuel has burnt down and the boiler has cooled off.
2	**SAFETY TEMPERATURE LIMITER (STL)** *(protection against overheating)* The STL switches off the combustion system when the boiler reaches 105°C. The pumps continue to run. Once the temperature falls below approx. 75°C, the STL can be unlocked mechanically:

2.8 Residual risks

⚠ WARNING

When the main switch is switched off in heating mode:

The boiler is placed in an uncontrolled state. Any resulting boiler malfunctions can cause serious injury and damage.

Therefore:

- ❒ Allow the fire to burn out completely and let the boiler cool, only then switch off the main switch.
  - ↳ ID fan switches off when "Off" status has been reached (flue gas temperature < 80 °C, boiler temperature < 65 °C)

⚠ WARNING

When touching hot surfaces:

Severe burns are possible on hot surfaces and the flue gas pipe!

When work is carried out on the boiler:

- ❒ Shut down the boiler according to procedure (“Off” operating status) and allow it to cool down
- ❒ Protective gloves must usually be worn for work on the boiler, and it should only be operated using the handles provided
- ❒ Insulate the flue gas pipes and do not touch them during operation

⚠ WARNING

If you open the combustion chamber door, pre-heating door, fuel loading door during operation:

This may result in injury, damage or flue gas generation!

Take the following precautions:

- ❒ Do not open the combustion chamber door or pre-heating chamber door while the boiler is running
- ❒ Keep the fuel loading door closed during operation and only open briefly during reloading intervals
- ❒ Protective gloves must be worn for work on the boiler, and it should only be operated using the handles provided

⚠ WARNING

If non-permitted fuel types are used:

Non-standard fuels can cause serious faults in combustion (e.g. spontaneous combustion of carbonisation gases / flash fires) which can lead to serious accidents!

Take the following precautions:

- ❒ Only use fuels specified in the "Permitted fuels" section of these operating instructions.

⚠ WARNING

When inspecting and cleaning the boiler with the main switch on:

Serious injuries possible due to boiler/individual components starting up automatically (induced draught)!

Before inspection and cleaning work in/on the boiler:

- ❒ Allow the fuel in the boiler to burn off
- ❒ Allow boiler to cool off and switch off main switch

NOTICE

Automatic ignition set incorrectly or not carried out

Possible damage to equipment from frost, etc.

Take the following precautions:

- ❒ Check the start time that has been set for automatic ignition
- ❒ After a short time, ensure that automatic ignition has been carried out successfully
  - ↳ Due to differing fuel compositions, Froling cannot guarantee successful automatic ignition. The manufacturer/supplier is not responsible for resulting damage.

2.9 Emergency procedure

2.9.1 Overheating of the system

If the system overheats and the safety devices fail to operate, proceed as follows:

NOTICE! Do not under any circumstances switch off the main switch or disconnect the power supply.

❒ Keep all the doors on the boiler closed

❒ Switch boiler off by tapping “Boiler OFF”

❒ Open all mixing valve taps, switch on all pumps.

↳ The Froling heating circuit control takes on this function in automatic operation.

❒ Leave the boiler room and close the door

❒ Open any thermostatic valves on the radiator and ensure sufficient heat dissipation from the rooms

If the temperature does not drop:

❒ Contact the installer or Froling customer services

2.9.2 Smell of flue gas

⚠ DANGER

If you smell flue gas in the boiler room:

Inhaling toxic flue gas can potentially be fatal!

If you smell flue gas in the room where the boiler is installed:

❒ Keep all the doors on the boiler closed

❒ Ventilate the room where the boiler is installed

❒ Close the fire door and doors to living areas

❒ Allow the fire to burn out completely and let the boiler cool

Recommendation: Do not install smoke alarms and carbon monoxide detectors near the system.

2.9.3 Power failure / induced draught fan failure

A power failure, among others, can be identified based on the following points:

- Display remains dark despite touching it
- LED status does not flash / light up
- No noise from the units (e.g. induced draught fan) can be heard

If the induced draught fan fails when there is power supply, the display shows the error message “`ID fan does not rotate, in spite of full activation`”.

⚠ DANGER

In the event of a power failure or induced draught fan failure during heating mode:

The boiler is placed in an uncontrolled state. Life-threatening injury is possible when opening the doors.

What to do in the event of a power failure / induced draught fan failure:

- ❒ Keep all the doors on the boiler closed
- ❒ Ventilate the room where the boiler is installed
- ❒ Close the fire door and doors to living areas
- ❒ Allow the fire to burn out completely and let the boiler cool

Recommendation: Equip the boiler with an uninterruptible power supply (UPS). This ensures correct combustion of the firewood and prevents possible uncontrolled conditions (tarring of the heat exchanger etc.).
Please refer to section entitled “Technical specifications” in the installation instructions for the boiler on how to design an uninterruptible power supply.

Recommendation: Do not install smoke alarms and carbon monoxide detectors near the system.

2.9.4 Fire in the system

⚠ DANGER

In case of fire in the system:

Risk of death by fire and poisonous gases

Emergency procedure in case of fire:

- ❒ Leave the room in which the boiler is installed and close the doors
- ❒ Press the on-site EMERGENCY STOP button
- ❒ Inform the fire department

3 Notes for operating a heating system

Carrying out modifications to the system and changing or disabling safety equipment is prohibited.

Always comply with all fire, building and electrical regulations when installing or operating the system, in addition to following the operating instructions and mandatory regulations that apply in the country in which the tank is operated.

3.1 Installation and approval

The boiler should be operated in a closed heating system. The following standards govern the installation:

Note on standards

EN 12828 - Heating Systems in Buildings

IMPORTANT: Every heating system must be officially approved.

The appropriate supervisory authority (inspection agency) must always be informed when installing or modifying a heating system, and authorisation must be obtained from the building authorities:

Austria: report to the construction authorities of the community or magistrate

Germany: report new installations to an approved chimney sweep / the building authorities.

3.2 Installation site

Requirements for the load bearing substrate:

- Flat, clean and dry
- Non-combustible and with sufficient load-bearing capacity

Conditions at the installation site:

- Protecting the system against frost
- Sufficiently well lit
- Free of explosive atmospheres such as flammable substances, hydrogen halides, cleaning agents and consumables
- Installation at altitude higher than 2000 metres above sea level only after consultation with the manufacturer
- The system must be protected against gnawing and nesting by animals (such as rodents)
- No flammable materials in proximity to the system
- Observe national and regional regulations regarding the installation of smoke detectors and carbon monoxide detectors

3.3 Combustion air

3.3.1 General requirement

For safe operation, the boiler requires around 1.5 - 3.0 m³ of combustion air per kW nominal heat output and operating hour. The air supply can be provided by free ventilation (e.g. windows, air shaft), mechanical ventilation from outside or, if necessary, from the group of rooms.

The boiler is operated depending on the room air, whereby the combustion air is taken from the installation site.

A suitable air supply must ensure that no impermissible under-pressure greater than 4 Pa is created at the installation site. The use of safety devices (under-pressure monitoring system) may be necessary, particularly if the boiler is operated concurrently with air-suction systems (such as an extractor fan).

Local **NOTICE! Safety equipment and conditions for the operation of the boiler (room air-dependent / room air-independent) must be clarified with the local authority (authority, chimney sweep, ...).**

3.3.2 Room air-independent operation

The combustion air is taken from the installation site. The unpressurised flow of the required air quantity must be ensured accordingly.

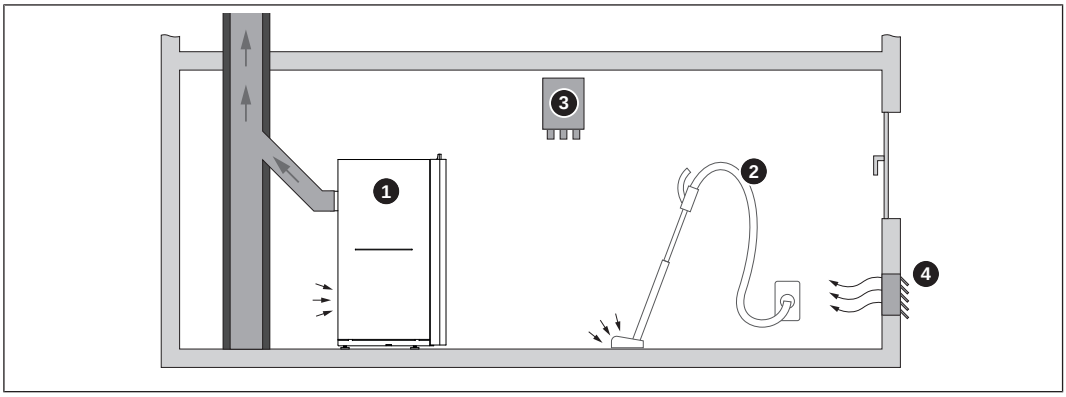

1	Boiler in room air-dependent operation
2	Air extraction system (such as centralised dust extraction system, room ventilation)
3	Under-pressure monitoring system
4	Combustion air supply from outside

The minimum cross-sectional area of the supply air opening from outside depends on the nominal heat output of the boiler.

Austria	400 cm² net minimum cross-sectional area plus 4 cm² for every kW of nominal heat output above 100 kW
Germany	150 cm² net minimum cross-sectional area plus an additional 2 cm² for every further kW of nominal heat output above 50 kW

Examples

Minimum free cross-section [cm²]										
Nominal heat output [kW]	**10**	**15**	**20**	**30**	**50**	**100**	**150**	**250**	**350**	**500**
Austria	400	400	400	400	400	400	600	1000	1400	2000
Germany	150	150	150	150	150	250	350	550	750	1050

Combustion air can also be supplied from other rooms if it can be proven that sufficient combustion air can flow in whilst all mechanical and natural ventilation systems are in operation. The installation site must have a minimum volume in accordance with the applicable regional standards.

Note on standards

Austria:	OIB Guideline 3 - Hygiene, health and environmental protection
Germany:	Model Firing Ordinance (MFeuV)

3.4 Domestic hot water

Unless contrary to other national regulations, the latest versions of the following standards and guidelines apply:

Austria:	ÖNORM H 5195	Switzerland:	SWKI BT 102-01
Germany:	VDI 2035	Italy:	UNI 8065

Observe the standards and also follow the recommendations below:

- ❒ Use prepared water which complies with the standards cited above for filling and make-up water
- ❒ Avoid leaks and use a closed heating system to maintain water quality during operation
- ❒ When filling with top-up water, always vent the filling hose before connecting it, in order to prevent air being drawn into the system
- ❒ Check that the heating water is clear and free of substances that can be deposited as sediments
- ❒ Check that the pH value is between 8.2 and 10.0. If the central heating water comes into contact with aluminium, the pH value must be between 8.2 and 9.0, as specified in VDI 2035
- ❒ The use of fully demineralised filling and top-up water with an electrical conductivity not exceeding 100 µS/cm is recommended by EN 14868
- ❒ After the first 6-8 weeks, check the heating water to ensure that the specified values are being adhered to
- ❒ Unless specified otherwise by regional standards and regulations, perform an annual check on the heating water

Filling and make-up water as well as heating water to VDI 2035 Sheet 1:2021-03:

Total heat output in kW	Total earth alkalis in mol/m³ (total hardness in °dH)		
	Specific system volume in l/kW heat output[1)]		
	≤ 20	20 to ≤40	> 40
≤ 50 specific water content heat generator ≥ 0.3 l/kW[2)]	none	≤ 3.0 (16.8)	< 0.05 (0.3)
≤ 50 specific water content heat generator < 0.3 l/kW[2)] (e.g. circulation water heater) and systems with electric heating elements	≤ 3.0 (16.8)	≤ 1.5 (8.4)	
> 50 to ≤ 200	≤ 2.0 (11.2)	≤ 1.0 (5.6)	
> 200 to ≤ 600	≤ 1.5 (8.4)	< 0.05 (0.3)	
> 600	< 0.05 (0.3)		

1. For calculating the specific system volume, the smallest individual heating capacity is to be used for systems with several heat generators.
2. In systems with several heat generators with different specific water contents, the smallest specific water content is decisive in each case.

Additional requirements for Switzerland

The filling and make-up water must be demineralised (fully purified)

- The water must not contain any ingredients that could settle and accumulate in the system
- This makes the water non-electroconductive, which prevents corrosion
- It also removes all the neutral salts such as chloride, sulphate and nitrate which can weaken corrosive materials in certain conditions

If some of the system water is lost, e.g. during repairs, the make-up water must also be demineralised. It is not enough to soften the water. The heating system must be professionally cleaned and rinsed before filling the units.

Inspection:

- After eight weeks, the pH value of the water must be between 8.2 and 10.0. If the central heating water comes into contact with aluminium, the pH value must be between 8.0 and 8.5
- Annually: values must be recorded by the owner

Advantages of heating water treated in accordance with the standards:

- Less of a drop in output due to reduced limescale build-up
- Less corrosion due to fewer aggressive substances
- Long-term cost savings thanks to improved energy efficiency

Frost protection

When operating the system with frost-protected heat transfer media, the following instructions and ÖNORM H 5195-2 must be observed:

- Antifreeze dosage according to the manufacturer's data sheet
  IMPORTANT: If the medium contains too much or too little antifreeze it becomes highly corrosive
- Adding antifreeze reduces the specific heat capacity of the medium; therefore design components (pumps, pipework, etc.) accordingly
- Add frost protection only to heat transfer medium in those areas that may be affected by frost (TIP: system separation)
- Check the antifreeze dosage regularly according to the manufacturer's instructions
- Dispose of frost-protected heat transfer medium at the end of its shelf life and refill the system

3.5 Pressure maintenance systems

Pressure maintenance systems in hot-water heating systems keep the required pressure within predefined limits and balance out volume variations caused by changes in the hot-water temperature. Two main systems are used:

Compressor-controlled pressure maintenance

In compressor-controlled pressure maintenance units, a variable air cushion in the expansion tank is responsible for volume compensation and pressure maintenance. If the pressure is too low, the compressor pumps air into the tank. If the pressure is too high, air is released by means of a solenoid valve. The systems are built solely with closed-diaphragm expansion tanks to prevent the damaging introduction of oxygen into the heating water.

Pump-controlled pressure maintenance

A pump-controlled pressure maintenance unit essentially consists of a pressure-maintenance pump, relief valve and an unpressurised receiving tank. The valve releases hot water into the receiving tank if the pressure is too high. If the pressure drops below a preset value, the pump draws water from the receiving tank and feeds it back into the heating system. Pump-controlled pressure maintenance systems with **open expansion tanks** (e.g. without a diaphragm) introduce ambient oxygen via the surface of the water, exposing the connected system components to the risk of corrosion. These systems offer no oxygen removal for the purposes of corrosion control as required by VDI 2035 and **in the interests of corrosion protection should not be used**.

3.6 Return lift

If the hot water return temperature is below the minimum return temperature, some of the hot water outfeed will be mixed in.

NOTICE

Risk of dropping below dew point/condensation formation if operated without return temperature control.

Condensation water forms an aggressive condensate when combined with combustion residue, leading to damage to the boiler.

Take the following precautions:

❒ Regulations stipulate the use of a return temperature control.

↳ The minimum return temperature is 60 °C. We recommend fitting some kind of control device (e.g. thermometer).

3.7 Combination with storage tank

You can find more detailed information about storage tank design in the boiler assembly instructions.

NOTICE! See "Design Information" section in the assembly instructions S4 Turbo

3.8 Chimney connection/chimney system

EN 303-5 specifies that the entire flue gas system must be designed to prevent, wherever possible, damage caused by seepage, insufficient feed pressure and condensation. Please note in this respect that flue gas temperatures lower than 160K above room temperature can occur in the permitted operating range of the boiler.

NOTICE! Please see the technical data contained in the assembly instructions for further information about standards and regulations as well as the flue gas temperatures when clean and the other flue gas values!

4 Operating the System

4.1 Assembly and initial startup

Assembly, installation and initial startup of the boiler must only be carried out by qualified staff, and these procedures are described in the accompanying assembly instructions.

NOTICE! See assembly instructions for theS4 Turbo

NOTICE

Optimum efficiency and efficient, low-emission operation can only be guaranteed if the system is set up by trained professionals and the standard factory settings are observed.

Take the following precautions:

❒ Initial startup should be carried out with an authorised installer or with Froling customer services

The individual steps for initial start-up are explained in the operating instructions for the controller

NOTICE! See operating instructions for boiler controller!

The customer is responsible for ensuring the following prior to initial start-up of the system by Froling customer services:

- Electrical installation
- Installation of water pipes
- Connect flue gas including all insulation work
- Work must comply with local fire protection regulations
- Correct assembly / setting of the air duct according to firewood used, see boiler assembly instructions

- When heating up the boiler for the first time to dry out the fireclay concrete, the customer must provide approx. 0.5 m³ of dry firewood.
- It is essential that the electrician who has carried out the installation work is available when starting up the system for the first time to make any changes to the wiring which may become necessary.
- During initial start-up, operating staff are shown how to use the boiler. It is imperative for proper handover of the product that those involved are present as this is a one-off opportunity.

NOTICE

If condensation escapes during the initial heat-up phase, this does not indicate a fault.

❒ Tip: If this occurs, clean up using a cleaning rag.

4.2 Switching on the power supply

❒ Turn on the main switch

↳ There is voltage at all of the boiler's components

↳ When the control has completed the system start, the boiler is ready for operation

4.3 Before heating up the boiler

4.3.1 Clean the heat exchanger pipes

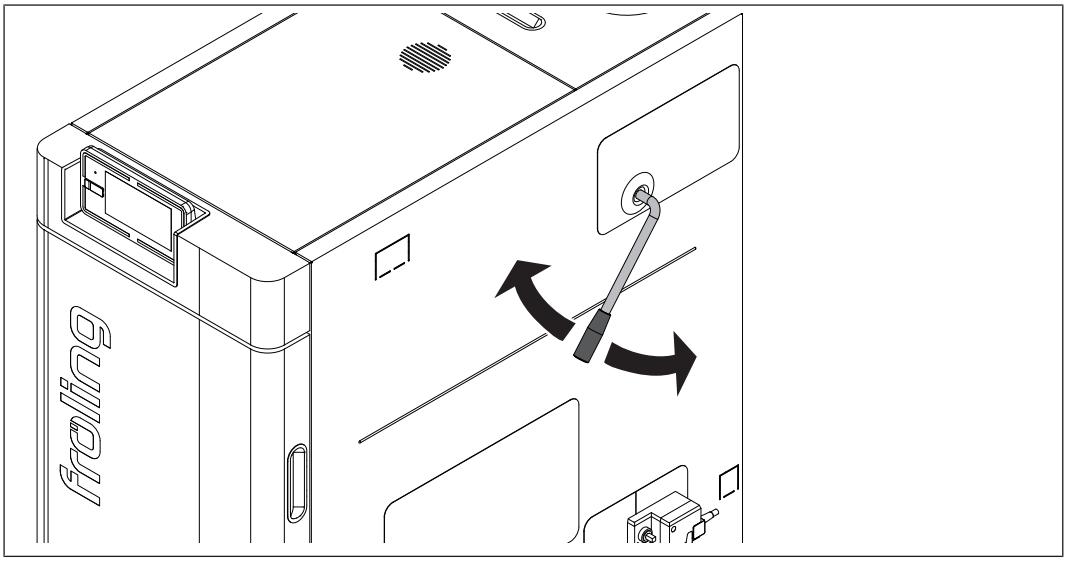

❒ Pull the lever of the cleaning system several times before heating up (up and down 5 – 10 times)

4.3.2 Check the igniter tube (for automatic ignition)

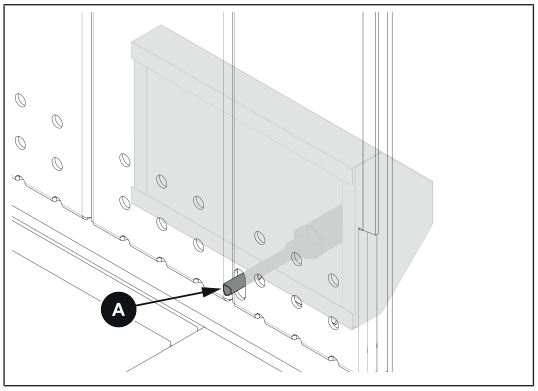

❒ Before filling the fuel loading chamber, check the igniter tube (A) of the automatic ignition for dirt and clean if necessary.

4.3.3 Reloading intervals when operating with storage tank

Reloading intervals and amounts should be determined exclusively according to the storage tank for efficient and environmentally-friendly heating.

If the information for the storage tank appears on the basic display, the symbol will show the tank load status. To set the information display, see ➲ "Select information displays" [▶ 41]

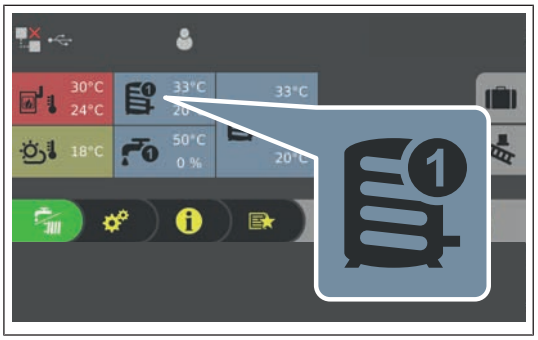

Load status	Procedure
	No bars or one bar in the store load status means that the storage tank needs to be heated up by approx. 35°C. ➲ "Reload quantity calculation" [▶ 28] or ➲ "Determining the right amount of fuel" [▶ 29]
	Two bars in the store load status mean that the storage tank needs to be heated up by approx. 20°C. ➲ "Reload quantity calculation" [▶ 28] or ➲ "Determining the right amount of fuel" [▶ 29]
	Three or four bars in the store load status mean that the storage tank cannot take any more heat, or only a small amount. In this case do not add fuel!

4.3.4 Reload quantity calculation

The reload quantity calculation is used to display on the control how much firewood is required to refill the boiler based on the current storage tank fill level. It does not take into account boiler efficiency, pipe losses and the energy required to heat the boiler and heating system.

Requirements for function:

1. Four temperature sensors installed in storage tank
2. Correct storage tank size specified
3. Reload quantity calculation activated

The control displays the following menu when the insulating door is opened:

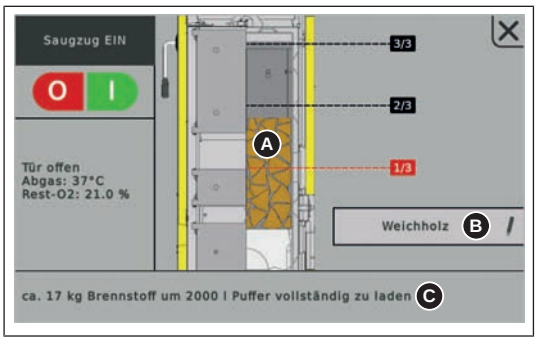

Item	Description
A	Graphic representation of required reload quantity
B	Fuel selection ▪ Soft wood ▪ Mixed wood ▪ Hardwood
C	Required reload quantity in kg, for example ▪ about 17 kg of firewood is needed to fully load a 2,000 l storage tank ▪ Sufficient heat available, do not heat/reload

4.3.5 Determining the right amount of fuel

The amount of fuel added should allow the storage tank to be constantly heated to the max. storage tank temperature (= boiler target temperature). Please note that the amount to reload also depends on the type of fuel.

Example: Heat a 2000 litre storage tank by 30°C

The calculation below only takes into account the storage tank. It does not take into account the boiler efficiency, pipe losses and the energy required to heat the boiler and heating system.

Assumption: The storage tank currently has a temperature of 50°C and should be heated to 80°C. The calculation below shows how much fuel is required for heating. First we calculate the energy required:

As the medium to be heated is water and the mass is roughly the same as the volume (2000 litres = 2000 kg), we can use the simplified formula Q = m x c x Δt.

Q = energy required
m = mass of the medium to be heated
c = heat capacity of the medium to be heated (constant for water)
Δt = temperature difference between start and end temperature[1)]

Mass (m) x heat capacity (c) x temperature difference (Δt) = energy (Q)

2000 kg x 1.163 Wh/kgK x 30 K = 69 780 Wh

69 780 Wh = **69.8 kWh**

Heating a 2,000 litre storage tank from 50°C to 80°C requires approx. 69.8 kWh of energy.

1. Temperature difference in Kelvins (K). As these are not absolute temperatures the value can be entered in degrees Celsius (°C). (30°C equals 30 K)

The amount of fuel can now be calculated from the energy required:

For our sample calculation we used beech with a water content w=20%. The energy content of the fuel varies according to the type of wood and the water content. (➲ "Fuel table" [▶ 30])

Energy required = 69.8 kWh (from calculation above)
Energy content of fuel = 3.8 kWh/kg (beech, w=20%)

Energy required / energy content of fuel = amount of fuel

69.8 kWh / 3.8 kWh/kg = **18.4 kg**

Approx. 18.4 kg beech wood (w=20%) is required to heat a 2,000 litre storage tank from 50°C to 80°C.

Fuel table

The table below shows a selection of wood types with the corresponding energy content depending on the water content:

Wood type	Energy content with water content [kWh/kg]		
	w = 15%	w = 20%	w = 25%
Spruce	4.3	4.0	3.7
Pine	4.3	4.0	3.7
Beech	4.1	3.8	3.5
Oak	4.1	3.8	3.5

If fuels with a water content below 15% are used, adjust the air duct accordingly, ➲ "Extra cleaning of flue gas paths" [▶ 74]

Fill level in boiler

The table below shows the relationship between fill level and weight. It compares beech (example of hardwood) and spruce (example of soft wood) with a water content of approx. 20%. Using our example above with beech, the fill level of an S4 Turbo 34 would, therefore, be approx. one third.

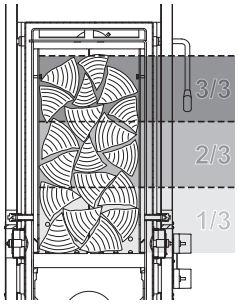

Fill level		Weight at fill level	
		S4 Turbo 15-28	S4 Turbo 32-60
3/3	Beech	approx. 45 kg	approx. 55 kg
	Spruce	approx. 28 kg	approx. 33 kg
2/3	Beech	approx. 30 kg	approx. 37 kg
	Spruce	approx. 19 kg	approx. 22 kg
1/3	Beech	approx. 15 kg	approx. 18 kg
	Spruce	approx. 9 kg	approx. 11 kg

4.3.6 Reloading intervals when operating without storage tank or if the storage tank is too small

NOTICE

Feed based on output:

Only replenish the fuel if energy is needed!

- ❒ If too much fuel is loaded, the boiler drops below its minimum output limit and goes over to "constant burn" operating status (blower fan switches off)
  - ↳ The level of efficiency drops in constant burn mode, the emissions increase and the boiler can tar up (pitch formation!)

4.4 Filling the boiler with firewood

NOTICE

Fill fuel loading chamber for later manual / automatic ignition

Premature self-ignition of the firewood by residual heat / temperature of the combustion chamber possible

Therefore:

- ❒ Completely remove residual embers from the combustion chamber
- ❒ Allow the combustion chamber to cool down
- ❒ An ash layer up to the middle row of holes in the combustion chamber guards facilitates the ignition process

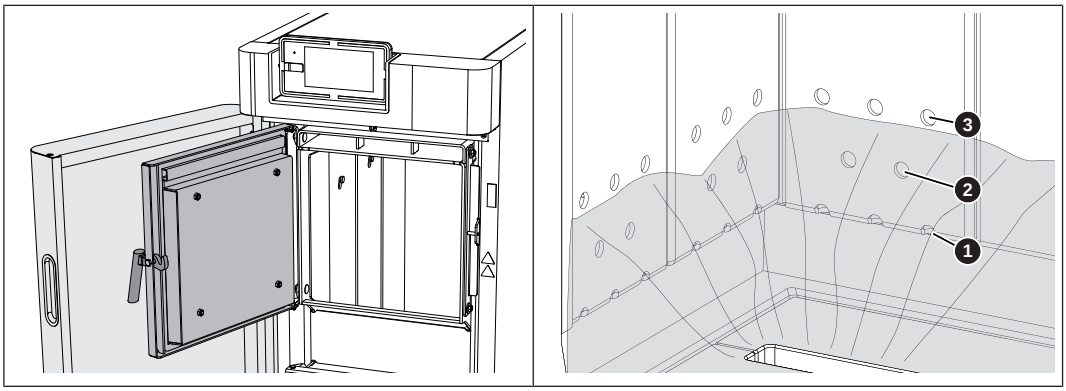

- ❒ Open the insulated door and the fuel loading door
- ❒ Check the ash level in the combustion chamber and remove if necessary
  ➲ "Emptying ash" [▶ 52]

Recommendation: Do not remove the ash in the combustion chamber each time you heat up the boiler, but rather only when the middle row of holes (2) in the combustion chamber guard is no longer visible. An even layer of ash protects the combustion chamber and makes the heating-up process more efficient.

Heat up firewood manually

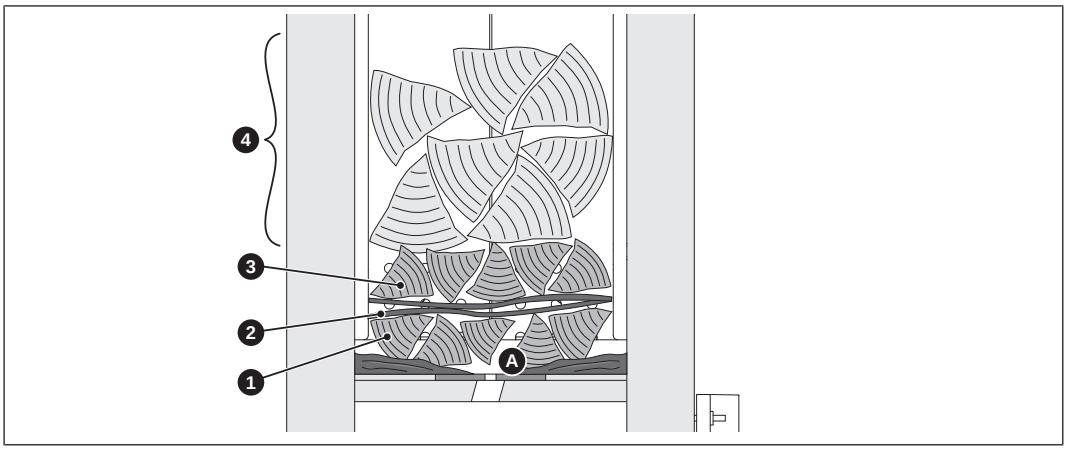

1. First layer of small pieces of split firewood
   – Length approx. 50 cm
   – Parts of the burn-out opening (A) in the grating must remain clear
2. Second layer with a generous amount of cardboard packaging up to the pre-heating chamber door
3. Third layer with more small pieces of split firewood
4. Depending on power consumption, fill the fuel loading chamber with firewood
   – ➲ "Determining the right amount of fuel" [▶ 29]

Heat up the firewood with automatic ignition

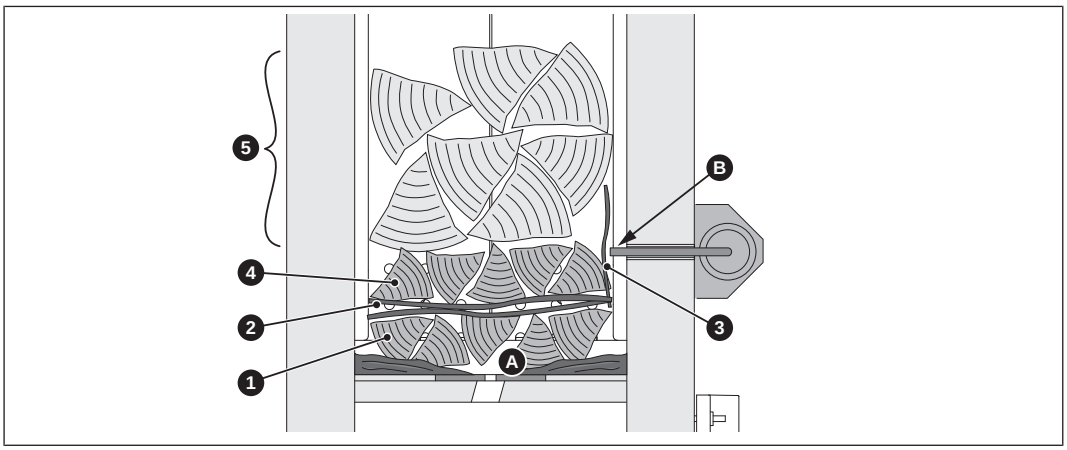

1. First layer of small pieces of split firewood
   – Length approx. 50 cm
   – Parts of the burn-out opening (A) in the grating must remain clear
2. Second layer with a generous amount of cardboard packaging
3. One piece of cardboard by the igniter tube (B)
4. Third layer with more small pieces of firewood
5. Depending on power consumption, fill the fuel loading chamber with firewood
   – ➲ "Determining the right amount of fuel" [▶ 29]

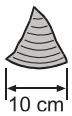

Definition – small pieces of split firewood:

- Maximum length of 10 cm along the cut edge
- Arrange firewood with a length of approximately 50 cm lengthwise in the fuel loading chamber

4.5 Heat up firewood manually

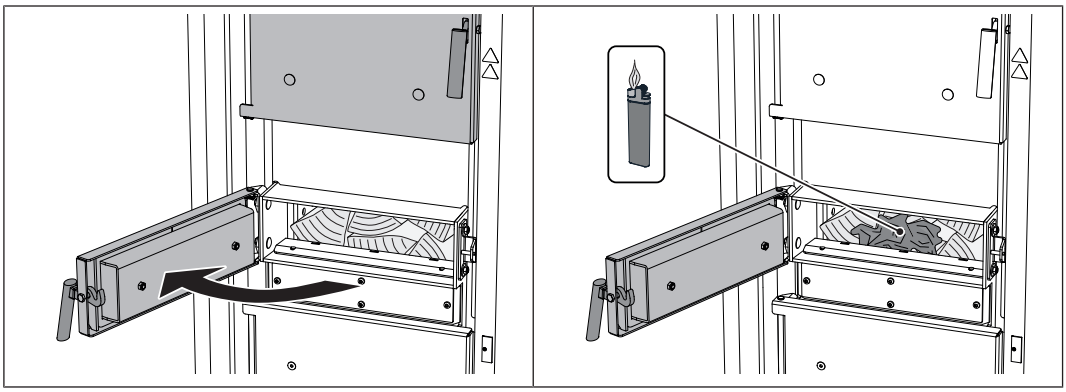

❒ Close the fuel loading door

❒ Open the pre-heating door, insert crumpled up paper and light

↳ If the underpressure is too strong to ignite:
switch off the induced draught fan by tapping “Induced draught OFF” on the boiler display

↳ Once successfully ignited:
switch induced draught fan back on by tapping “Induced draught ON”

❒ Leave the pre-heating chamber door open for approximately 5 minutes

↳ A bed of embers forms

↳ Wait for the message on the boiler display to close the pre-heating chamber door

❒ Close the pre-heating chamber door and the insulated door

4.6 Heat up the firewood with automatic ignition

NOTICE

Automatic ignition set incorrectly or not carried out

Possible damage to equipment from frost, etc.

Take the following precautions:

❒ Check the start time that has been set for automatic ignition

❒ After a short time, ensure that automatic ignition has been carried out successfully

↳ Due to differing fuel compositions, Froling cannot guarantee successful automatic ignition. The manufacturer/supplier is not responsible for resulting damage.

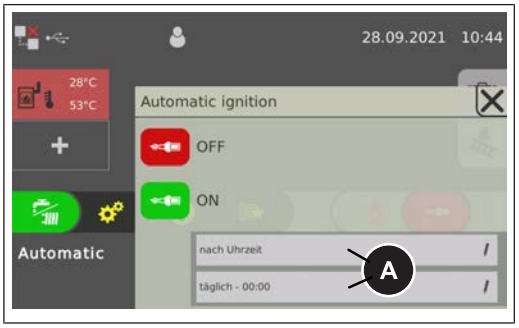

❒ Select the “Ignite firewood” on the basic display

In submenu (A) set the criteria for starting the ignition:

Setting	Description
Date and time	The ignition process starts at the set time. When “daily” is selected, the ignition process starts at the set time every day. CAUTION: The status of the hydraulic system is not taken into account!
ignite immediately	The ignition process starts immediately upon closing the fuel loading door and after the preparation time for the Lambda probe has run out (approx. 2 minutes).
ext. release	The ignition process starts due to an external release (boiler release contact at the core module).
Buffer tank min	If the buffer tank temperature falls below a defined value and if the date/ time have been reached, the ignition process starts daily.
Buffer < f.flow	If the buffer tank temperature falls below the maximum flow temperature setpoint and if the date/time have been reached, the ignition process starts daily.

NOTICE! In the case of daily ignition, if fuel is not replenished by the preset time the boiler cannot be started.

NOTICE! See operating instructions for boiler controller for a detailed description.

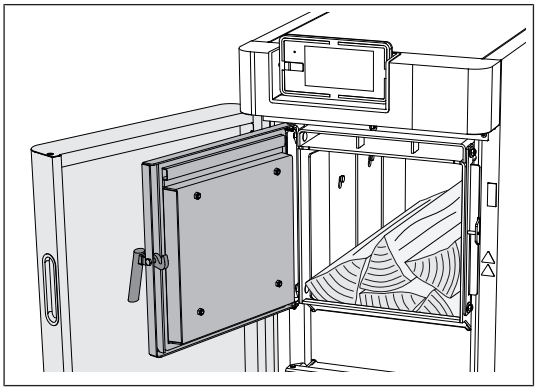

❒ Close the fuel loading door and insulated door

After closing the insulated door

- The boiler switches to “Preventilation” status. To guarantee a safe operating status and to rule out possible ignition by residual embers due to incomplete cleaning of the combustion chamber, the boiler attempts to reach "Heating" status within a specified safe time period without activating the ignition.
- Once this preset safe period of time has passed, the boiler remains in “Awaiting ignition” status until the preset time for automatic ignition has been reached.
  NOTE! See operating instructions for boiler controller!

4.7 Operate the boiler using the touch display

4.7.1 Overview of the touch display

A	Display of freely selectable information ➲ "Select information displays" [▶ 41]
W	Display and switch the current user level ➲ "Lock display/switch user level" [▶ 48]
C	Display and change the current date/time ➲ "Change date and time" [▶ 43]
D	Holiday program ➲ "Configure the holiday program" [▶ 49]
E	Chimney sweeper function ➲ "Emissions measurement by chimney sweep or regulatory body" [▶ 71]
F	Display of the current operating status
G	View available functions in the quick menu ➲ "Quick menu" [▶ 40]
H	Access all system information. No parameters may be changed in the info menu.
I	System menu for opening the system settings. All parameters can be displayed and/or edited depending on the user level ➲ "Navigation within the system menu" [▶ 38]
J	Display and change the current boiler mode ➲ "Change boiler mode" [▶ 43]
K	Display icons for using froeling-connect ➲ "Display icons for froeling-connect/remote control" [▶ 37]
L	Brightness sensor for automatically adjusting the brightness of the display
M	Status LED to display the current system status ➲ "Status display" [▶ 36]

N	USB interface for software update (⇨ see operating instructions for the boiler controller) **NOTICE! USB interface is for service purposes only and must not be used for charging devices or for PC connections!**

Status display

The status display indicates the system's operating status:

- GREEN flashing (interval: 5 sec OFF, 1 sec. ON): Off
- GREEN constant: **BOILER SWITCHED ON**
- ORANGE flashing: **WARNING**
- RED flashing: **FAULT**

Control icons

	Confirms values entered; activates parameters
	Discards any values entered without saving; and closes messages
	Back to basic display
	Accesses all system information
	Opens quick menu. Selection of functions depending on user level, configuration and current status.
	Tap to change parameters (dropdown menu or numeric keypad)
	Opens system menu. Menu display depends on user level and configuration
	Back to higher menu level.

Display icons for froeling-connect/remote control

The icons for connection status and remote control are displayed at the top left of the touch display. Tap on these icons to open the “Connection Centre”. In the menu, the connection to froeling-connect as well as the remote control (switching on and off by external users) is activated/deactivated

Status to froeling-connect		Remote control of the boiler	
	froeling-connect is deactivated or not in use		Remote control of the boiler is permitted
	Establishes connection to froeling-connect		Remote control of the boiler is not permitted
	Connection to the froeling-connect server		
	No network connection to froeling-connect		
	No connection to froeling-connect server, ➲ "Connection status to "froeling-connect"" [▶ 37]		

Connection status to "froeling-connect"

The connection status to “froeling-connect” is displayed in the info menu.

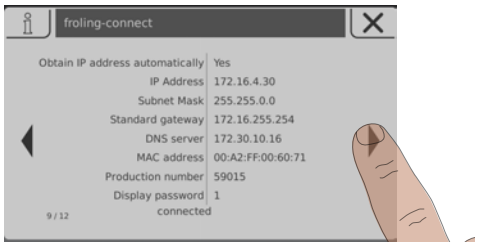

❒ Tap the info menu in the basic display and navigate to the “froeling-connect” menu

↳ The connection status is displayed in the lower range (connected, deactivated, …)

NOTICE! Consult the “froeling-connect” operating instructions for a detailed description of the connection status as well as troubleshooting

Navigation within the system menu

The system menu shows the menus available depending on the user level and the system configuration. Use the right and left arrows to navigate to the individual menus. Tap the corresponding icon to open the menu. Within the individual menus, the status display is shown with current values. If, for example, several heating circuits are installed, you can use the right and left arrows to navigate to the desired heating circuit.

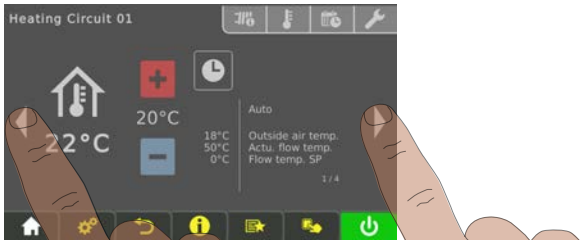

Tap the respective tab to carry out settings in the menus.

Icon	Tab	
	Status	
	Temperatures	
	Times	
	Service	
	General settings	
	Solar heat meter	

Changing parameters

If there is a “pencil” symbol next to a parameter text, the parameter can be edited. Depending on the type of parameter, it can be edited using the numeric keypad or by selecting from a list and then tapping on the “Confirm” symbol.

Numeric keypad	Dropdown list
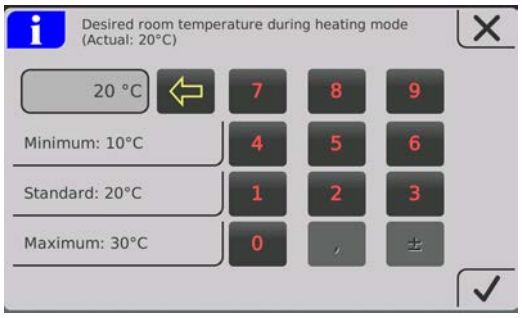	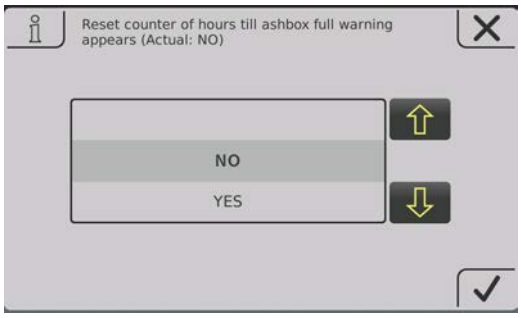

Change time window

The desired time window can be set in the “Times” tab in the menus of the heating components (heating, water, etc.). Up to four time windows are possible per day.

- ❒ Use the left or right arrow to navigate to the desired day of the week
- ❒ Tap the time window or icon underneath the day of the week
- ❒ Tap on the time window to be changed

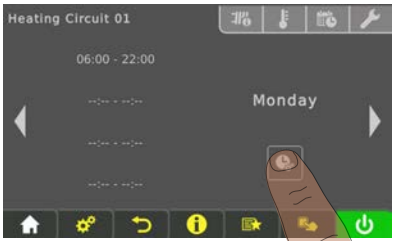

- ❒ Use the up and down arrows to set the start and end time and save by tapping the “Confirm” icon

The time window set is saved for all selected days of the week.

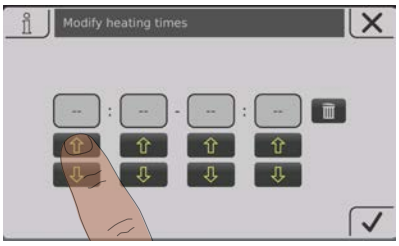

To delete a saved time window, tap on the “Recycle bin” icon next to it.

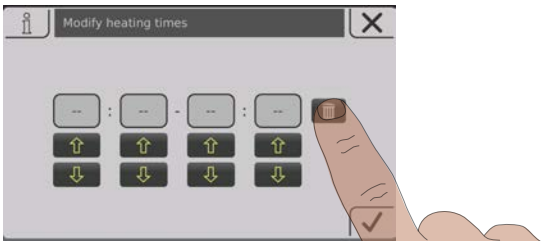

Quick menu

The quick menu provides different functions depending on the system configuration and system status.

Icon	Description
	Language selection Sets the desired system language: Deutsch – English – Francais – Italiano – Slovenski – Cesky – Polski – Svenska – Espanol – Magyar – Suomi – Dansk – Nederlands – Русский – Srpski – Hrvatski
	Clean the touch display The touch display is locked for 10 seconds, during which time it is possible to clean it without inadvertently changing the settings.
	User level Changes the current user level **Code “0”** … Child lock/Control lock **Code “1”** … Customer
	Extra heating Boiler starts, heating and domestic hot water tank are activated for 6 hours. The mode setting is ignored. CAUTION: The external temperature heating limit set in the "Heating" menu is active and can prevent release of the heating circuits.
	Extra loading One-time extra loading of all available DHW tanks. Subsequently, the mode that was previously set becomes active again.
	Error display List of all pending boiler faults and how to eliminate them.

	Setting wizard **Switching on for the first time:** Setting the language, manufacturer’s number, date and time **Connect:** Setting parameters required for the boiler to use the “froeling-connect.com” (IP address, display password, …)

	Ignition Opens the settings for the automatic hot air ignition for firewood boilers.

4.7.2 Select information displays

Tapping on the randomly selectable information displays in the basic display opens the respective menu. The following options are available depending on the system configuration:

Menu	Selection	Icon	Description
Boiler	Empty ash box in		Display of the remaining heating hours until the message “Ash box full, please empty” appears.
	Temperatures		Display of boiler und flue gas temperature
	Operating hours		Display of the operating hours and the operating hours since last maintenance.
Outside air temperature	Temperatures		Display of the current outside air temperature.
Boiler 2	Temperatures		Display of the temperature of the secondary boiler and the status of the burner relay
Solar	Temperatures		Display of the collector temperature and control of the collector pump.
Heating circuit 01 – 18	Temperatures		Display of the actual flow temperature and flow temperature setpoint of the respective heating circuit.
DHW tank 01 – 08	Temperatures		Display of the current DHW tank temperature and control of DHW tank pump of the respective DHW tank.
Storage tank 01 – 04	Temperatures		Display of storage tank temperature, top and bottom
	3 temperature sensors[1)]		Display of storage tank temperature, top, middle and bottom.
	4 temperature sensors[1)]		Display of storage tank temperature top, store sensor 2, store sensor 3 and bottom.
Circulation pump	Temperatures		Display of the status at the flow sensor (if present) and the current circulation return temperature.
Differential controller	Temperatures		Display of the current temperature from source and recess of the differential regulator
System	CPU/RAM capacity	CPU RAM	Display of the CPU and RAM capacity in percent

1. This selection merges two tiles together, reducing the maximum number of information displays!

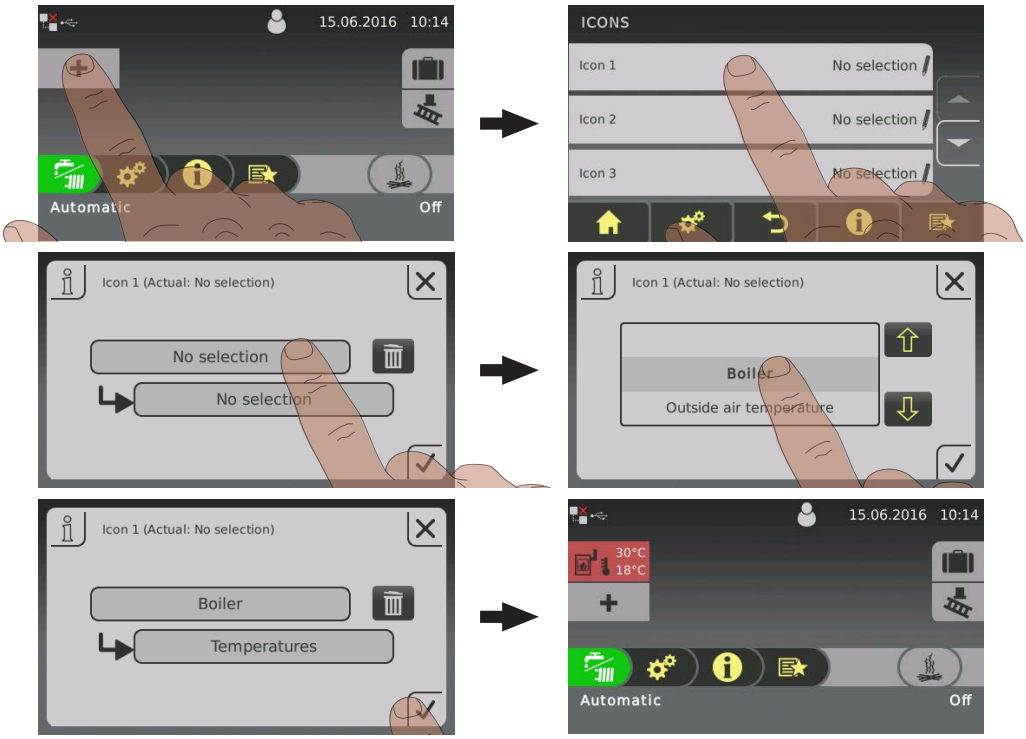

When using more than two store sensors, it is possible to have an information display with storage tank temperatures in accordance with the number of sensors. An information display that spans two areas is used.

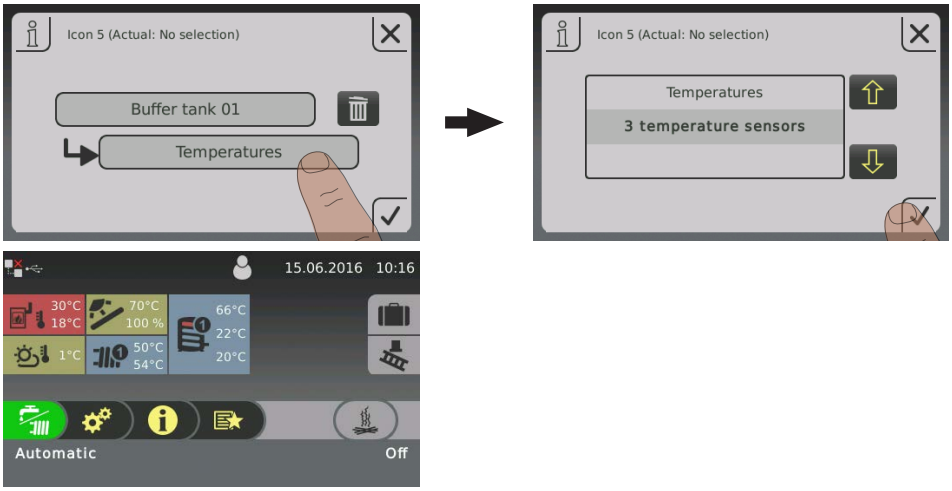

4.7.3 Change boiler mode

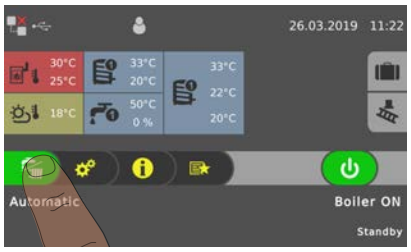

Depending on the type of boiler, there are several modes available which can be changed directly in the basic display of the touch display.

Mode	Icon	Description
Automatic		Supply heating circuits and domestic hot water tanks with heat according to the selected heating times.
Domestic hot water		The domestic hot water tank is supplied with heat within the selected loading times. Heating circuits are switched off, frost protection remains active.
Continuous load		The boiler continuously maintains the selected boiler temperature setpoint and only shuts down for cleaning purposes. Supply heating circuits and domestic hot water tanks with heat according to the selected heating times.

NOTICE! Consult the enclosed operating instructions for the boiler controller for a detailed description of the boiler modes.

4.7.4 Change date and time

Tap on the displayed date and time to change the date and time in the basic display. Use the up and down arrows to adjust the settings and tap on the “Confirm” icon to save.

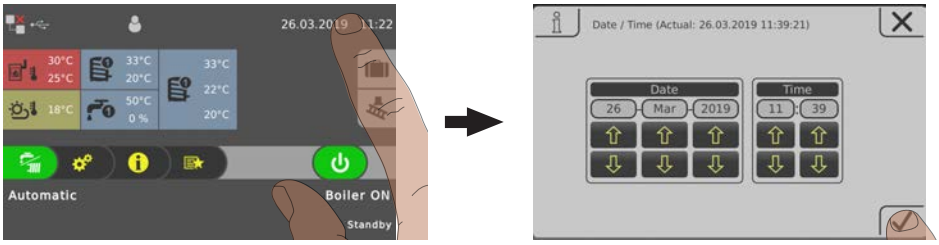

4.7.5 Change desired DHW tank temperature

❒ Tap the information display for the desired DHW tank

❒ Adjust the temperature setpoint by tapping on “+” or “-”

NOTICE! If this selection is not configured in the information display in the basic display, open the components in the system menu.

4.7.6 One-time extra loading of an individual DHW tank

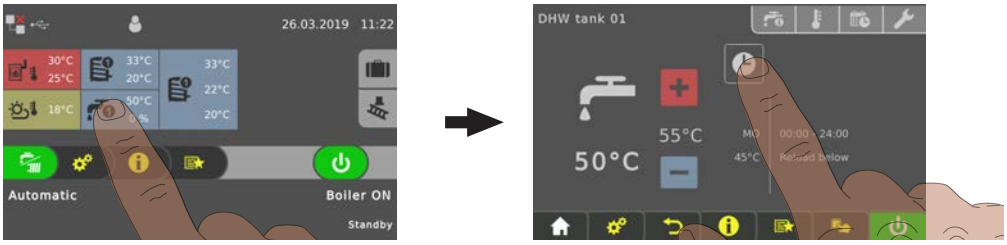

❒ Tap the information display for the desired DHW tank

❒ Tap the mode icon for the DHW tank

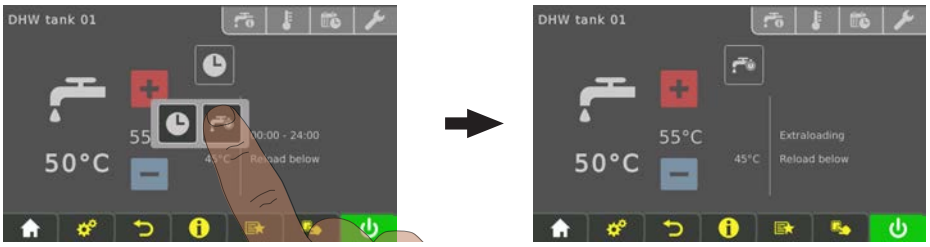

❒ Tap the “extra loading” icon

↳ One-time loading of DHW tank starts. Once the selected DHW tank temperature setpoint has been reached, loading stops and the icon switches to “automatic”.

NOTICE! If this selection is not configured in the information display in the basic display, open the components in the system menu.

4.7.7 One-time extra loading of all existing DHW tanks.

In the case of several DHW tanks, the “extra loading” function in the quick menu is used to start a one-time extra loading of all existing DHW tanks.

➲ "Quick menu" [▶ 40]

4.7.8 Setting the heating curve for a heating circuit

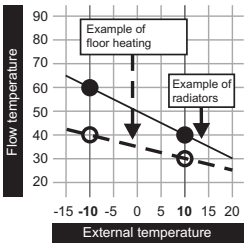

A flow temperature is calculated using the heating curve of the heating circuit depending on the outside air temperature and the two adjustable parameters "`flow temperature at -10°C outside air temperature`" and "`flow temperature at +10 °C outside air temperature`".

Example:

The heating curve is defined with 60°C (at -10°C outside air temperature) and 40°C (at +10°C outside air temperature). If the current outside air temperature is -2°C, the flow temperature is calculated as 52 °C.

Heating circuits without measuring the room temperature are operated using the calculated values. The heating curve must be adapted to influence the room temperature, ➲ "Change room temperature (heating circuit without room temperature sensor)" [▶ 46]

When using a room temperature sensor (analogue remote control FRA, room console RBG 3200, room console RBG 3200 Touch, room temperature sensor) it is not necessary to interfere with the heating curve. Any deviation of the actual room temperature to the room temperature setpoint is automatically compensated by increasing/reducing the flow temperature.

When starting up the system it is defined whether the heating circuit is operating as a "high temperature circuit" or a "low temperature circuit". The following values are set:

High temperature circuit
▪ Desired flow temperature at -10°C outside air temperature: **60 °C** ▪ Desired flow temperature at +10 °C outside air temperature: **40 °C**

Low temperature circuit
▪ Desired flow temperature at -10°C outside air temperature: **40 °C** ▪ Desired flow temperature at +10 °C outside air temperature: **30 °C**

Reduction of flow temperature

Outside of the set heating times (➲ "Change time window" [▶ 39]), the setback mode is active and the calculated flow temperature is reduced by the adjustable value "`Lowering the flow temperature in setback mode`".

Heating limits

The outside air temperature heat limits are set in the "Temperatures" tab and they activate/deactivate the heating circuit depending on the outside air temperature or time period.

Parameter	Effect
Outside air temperature, at which heating circuit pump switches off in heating mode (default: 18°C)	If the outside air temperature difference rises above the set value, the heating circuit is deactivated. (Pump off, mixing valve closes)
Outside air temperature, at which heating circuit pump switches off in setback mode (default: 7°C)	If the outside air temperature in setback mode (default: 22:00 – 06:00) falls below the set value, the heating circuit is activated (pump on, mixing valve regulated as per heating curve)

4.7.9 Change room temperature (heating circuit without room temperature sensor)

Situation	Effect
Room temperature generally too low	Move the heating curve up in parallel. Increase both points on the heating curve by the same temperature level. (see figure 1)
Room temperature on cold days too low, OK on warm days	Changing the slope of the heating curve. Increase the temperature level of the heating curve at -10°C outside temperature (see figure 2)
Room temperature on warm days too high, OK on cold days	Changing the slope of the heating curve. Reduce the temperature level of the heating curve at +10 °C outside temperature (see figure 3)

Figure 1

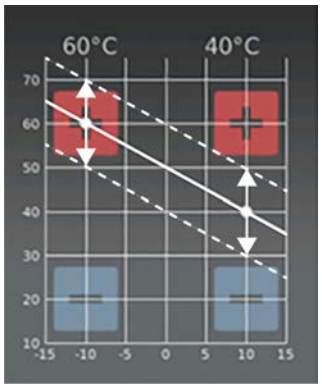

Figure 2

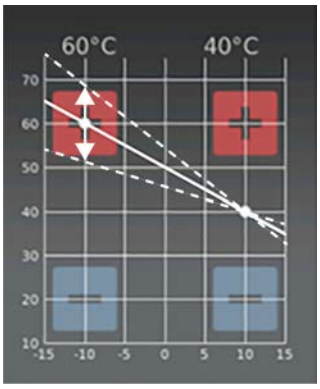

Figure 3

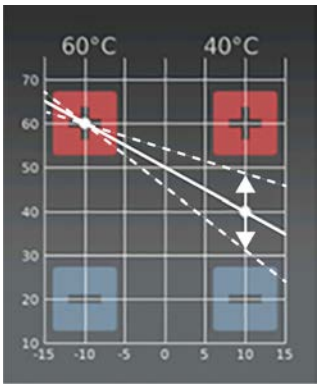

Depending on the situation, the heating curve an be adapted by tapping “+” or “-” at +/-10°C outside air temperature.

If the heating curve is to be changed, never change the desired point for a high temperature circuit more than 5°C, and never more than 3°C for a low temperature circuit. Once the changes have been made, wait a few days and assess comfort levels before carrying out additional changes.

4.7.10 Change room temperature (heating circuit with room temperature sensor)

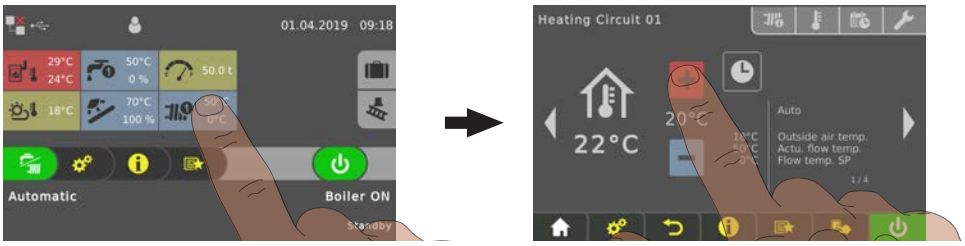

❒ Tap information display of the desired heating circuit

❒ Tap “+” or “-” to adjust the desired room temperature

NOTICE! If this selection is not configured in the information display in the basic display, open the components in the system menu.

4.7.11 Switch heating circuit mode

Tap the mode icon in the menu of the respective heating circuit in order to change the mode.

Procedure	Icon	Description	
		OFF	The heating circuit is switched off. Frost protection remains active!
		Auto	The heating circuit is controlled according to the set time program.
		Party	The heating circuit is regulated before the start of the next heating time. To cancel this function prematurely, activate another mode/function.
		Setback mode	The heating circuit is regulated to the set setback temperature until the start of the next heating time. To cancel this function prematurely, activate another mode/function.
		Extra heating	The heating circuit is regulated to the set room temperature with no time limitation. To cancel this function prematurely, activate another mode/function.
		Continuous setback mode	The heating circuit is regulated to the set setback temperature until activation of another mode/function.

4.7.12 Lock display/switch user level

For safety reasons, individual parameters are only visible at specific operating levels. To change to another level it is necessary to enter the relevant user code.

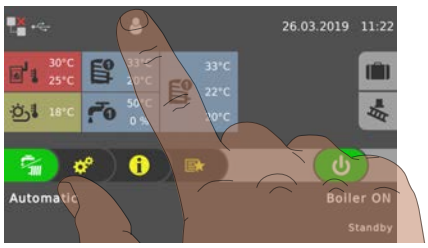

❒ Tap on the icon for the user level in the upper area of the basic display and enter the code.

User level	Icon	Description
Operating lock (Code “0”)		At “Lock” level, only the basic display appears. It is not possible to change parameters.
Customer (Code “1”)		Standard user level for normal operation of the controller. All customer-specific parameters are displayed and can be changed.
Installer		Releases parameters to adjust the controller to the system components (if configured). All parameters are available.
Service		

4.7.13 Change the name of the components

The names of the DHW tank, storage tank and heating circuits can be freely selected. A maximum of 20 characters are available for the name.

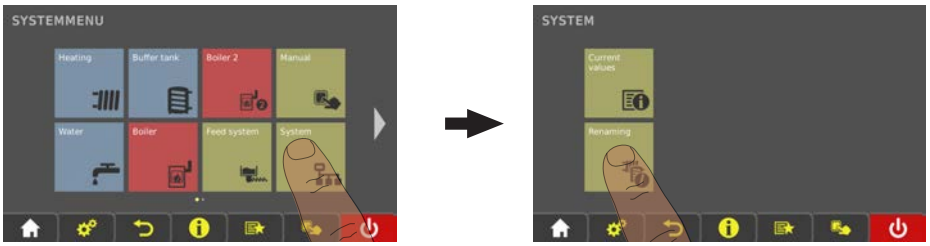

❒ Navigate to the “System” menu and open the “Renaming” sub-menu

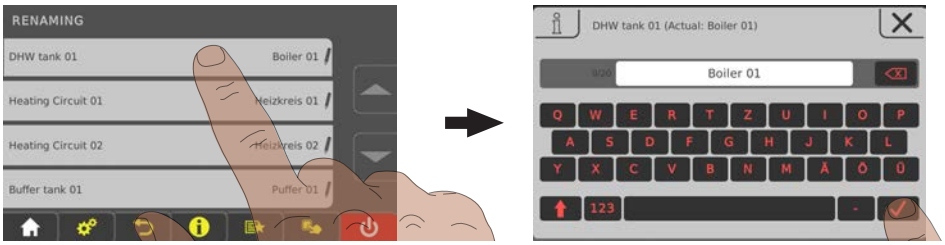

❒ Tap the desired component and use the keyboard to rename it

4.7.14 Configure the holiday program

Setting a start and end date in the holiday program determines a time period in which an active heating circuit is regulated for the set setback temperature and in which an activated boiler is not loaded. If Legionella heating is set, it remains active.

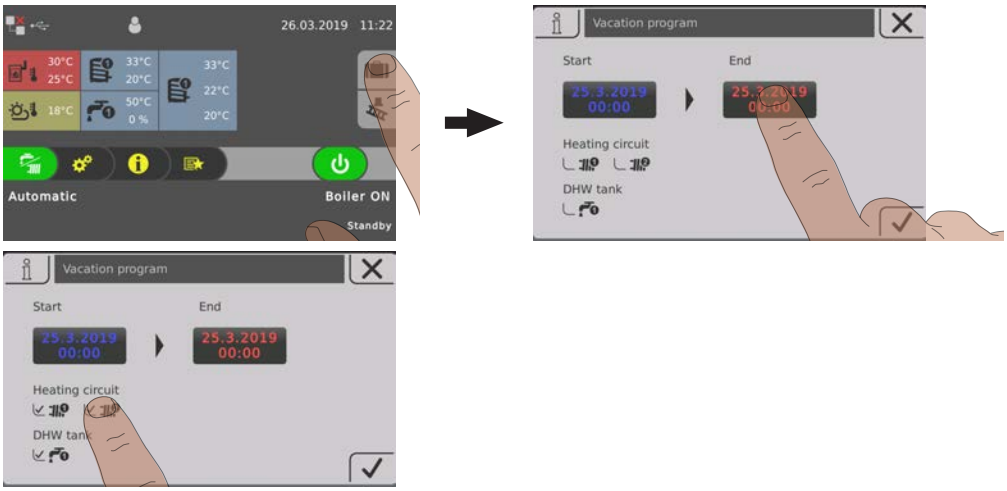

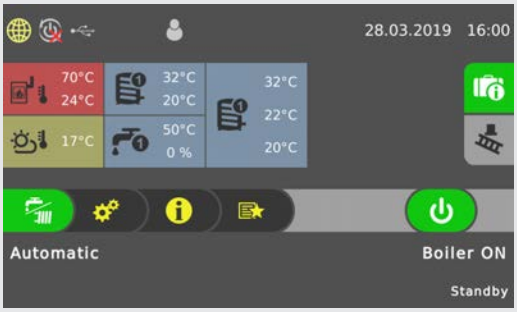

If the start date is set in the future, the “suitcase” icon will be highlighted in green.

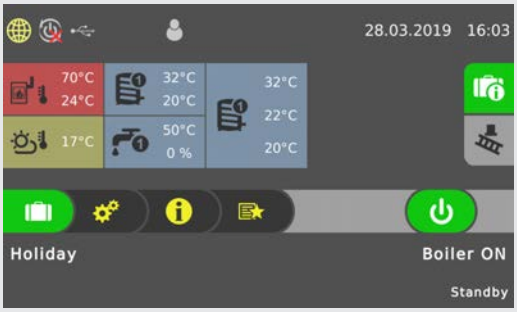

Once the set start time of the holiday program has been reached, the boiler switches to “holiday” mode

Tap the “suitcase” icon to prematurely end the holiday program. The boiler then switches to the previously activated mode (“water tap” symbol = domestic hot water, “water tap/ radiator” symbol = automatic).

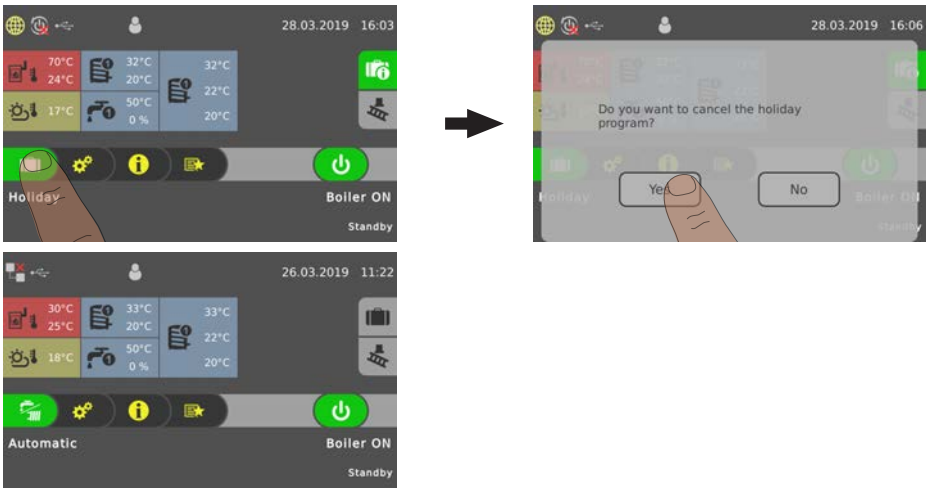

4.8 Reloading firewood

⚠ WARNING

Touching hot surfaces behind the insulated door

can cause burns!

By the nature of its operation, the surfaces and operating elements in the area behind the insulated door get hot! When working with firewood, there is also a risk of injury from splinters.

❒ When working on the boiler during operation, particularly when reloading fuel, always wear protective gloves.

⚠ WARNING

Opening the fuel loading door

can cause injury, damage and smoke!

❒ Open the fuel loading door slowly and with care

❒ Close the fuel loading door again immediately after checking/reloading

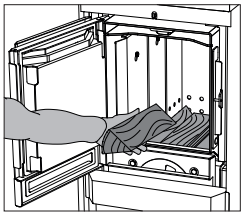

❒ Open the fuel loading door slowly and check the fuel

If the fuel in the boiler has burnt down:

❒ Refill with fuel
➲ "Determining the right amount of fuel" [▶ 29]

If the fuel in the boiler has not finished burning down or if enough flue gases are still forming:

❒ Close the fuel loading door immediately

4.9 Switching off the power supply

⚠ WARNING

When the main switch is switched off in heating mode:

The boiler is placed in an uncontrolled state. Any resulting boiler malfunctions can cause serious injury and damage.

Therefore:

❒ Allow the fire to burn out completely and let the boiler cool, only then switch off the main switch.

↳ ID fan switches off when "Off" status has been reached
(flue gas temperature < 80 °C, boiler temperature < 65 °C)

❒ Turn off the main switch

↳ Boiler controller is switched off

↳ There is no power supply to any of the boiler components

NOTICE! Frost protection function is no longer active!

4.10 Checking the ash level in the boiler

NOTICE

Cracks in the combustion chamber may occur during operation.
If the fireclay elements and the surrounding seals remain in their original position, existing cracks do not represent a malfunction!

4.10.1 Emptying ash

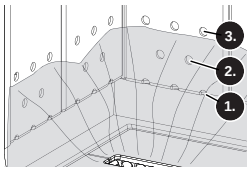

Recommendation: Do not remove the ash in the combustion chamber each time you heat up the boiler, but rather only when the middle row of holes (2) in the combusion chamber guard is no longer visible. An even layer of ash protects the combustion chamber and makes the heating-up process more efficient.

Carry out all other cleaning work described in this section in the same way.

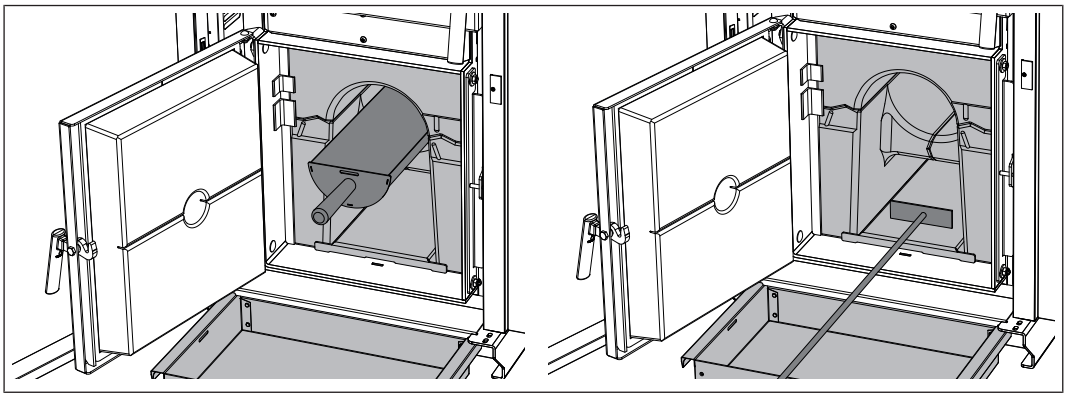

- ❒ Open the pre-heating chamber door and move the ash into the combustion chamber below using the furnace tool
- ❒ Open the combustion chamber door and remove ash with a round ash shovel
- ❒ Using the furnace tool, push the ash out of the lower channel of the combustion chamber into the ash drawer
- ❒ Shovel the ash into container provided
  - ↳ Use a fire-proof container with cover

4.10.2 Cleaning the grating

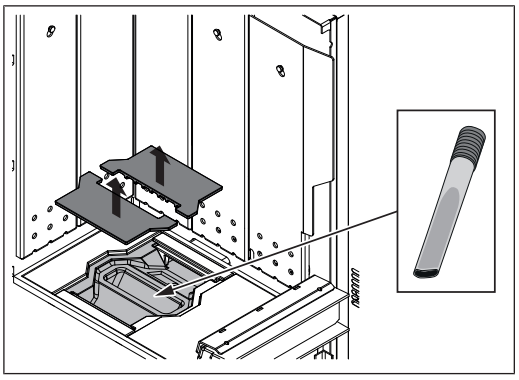

❒ Open the insulated door and the fuel loading chamber door

❒ Remove the two-part grating

❒ Remove ash deposits under the grating to ensure proper intake of secondary air.

↳ Tip: Use an ash vacuum!

5 Servicing the system

5.1 General information on servicing

⚠ DANGER

When working on electrical components:

Risk of electrocution!

When work is carried out on electrical components:

- ❒ Always have work carried out by a qualified electrician
- ❒ Observe the applicable standards and regulations
  - ↳ Work must not be carried out on electrical components by unauthorised persons

⚠ WARNING

During inspection and cleaning work on the hot boiler:

Hot parts and the flue spigot can cause serious burns!

- ❒ Always wear protective gloves when working on the boiler
- ❒ Only operate the boiler using the handles provided
- ❒ Before inspection and cleaning work in/on the boiler, allow the fuel in the boiler to burn off
- ❒ Allow boiler to cool off and switch off main switch

⚠ WARNING

When inspecting and cleaning the boiler with the main switch on:

Serious injuries possible due to boiler/individual components starting up automatically (induced draught)!

Before inspection and cleaning work in/on the boiler:

- ❒ Allow the fuel in the boiler to burn off
- ❒ Allow boiler to cool off and switch off main switch

NOTICE

We recommend you keep a maintenance book in accordance with ÖNORM M7510.

⚠ WARNING

Incorrect inspection and cleaning:

Incorrect or insufficient inspection and cleaning of the boiler can cause serious faults in combustion (e.g. spontaneous combustion of carbonisation gases / flash fires) and this can lead to serious accidents and damage!

Take the following precautions:

- ❒ Clean the boiler following the instructions in the instruction manual. Follow the boiler operating instructions.

5.2 Required tools

The following tools are required for carrying out cleaning and maintenance work:

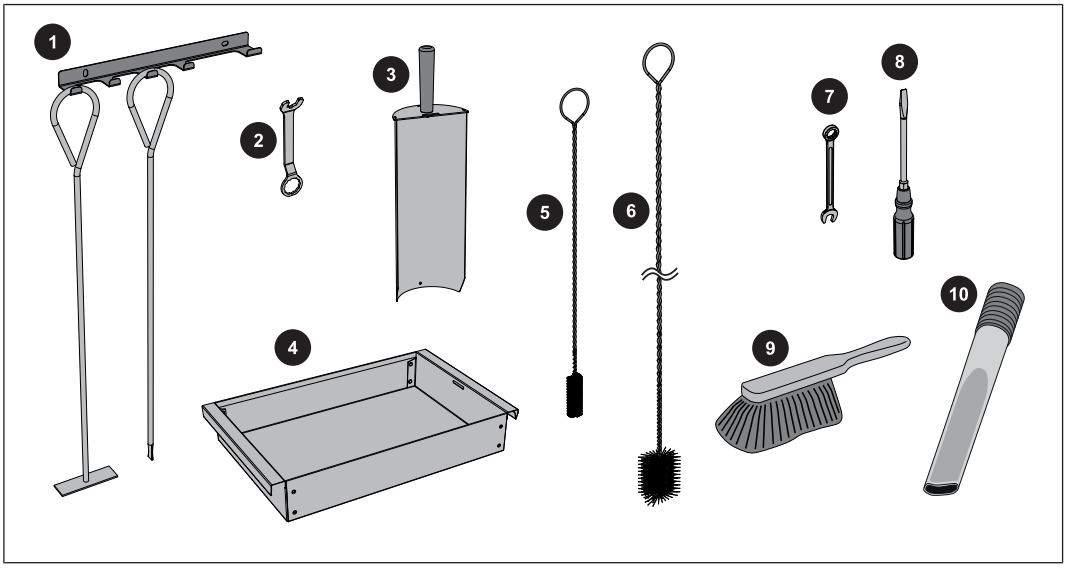

Included in delivery:	
1	Furnace tool with bracket
2	Spanner for door mountings
3	Ash shovel
4	Ash drawer
5	Cleaning brush (30x20) for cleaning the carbonisation gas duct
6	Cleaning brush (Ø54) for cleaning the heat exchanger

Not included:	
7	Spanner or box wrench AF 13
8	Screwdriver set (Philips, flat head, Torx T20)
9	Small brush or cleaning brush
10	Ash vacuum

5.3 Maintenance work by the operator

❒ Regular cleaning of the boiler extends its life and is a basic requirement for smooth running.

❒ Recommendation: Use an ash vacuum for cleaning.

Reassemble the boiler components dismantled during maintenance in the reverse order after the work has been completed..

5.3.1 Inspection

Checking the system pressure

❒ Check the system pressure on the pressure gauge

↳ The value must be 20% above the pre-stressed pressure of the expansion tank
NOTICE! Check that the position of the pressure gauge and rated pressure of the expansion tank match your installer's specifications!

If the system pressure decreases:

❒ Top up with water
NOTICE! If this happens frequently, the seal of the heating system is faulty! Inform your installer

If large pressure fluctuations are observed:

❒ Ask an expert to inspect the expansion tank

Checking the thermal discharge safety device

❒ Regularly check the function and seal of the thermal discharge valve in accordance with the manufacturer’s instructions

Checking the safety valve

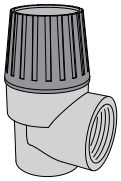

❒ Check the seal of the safety valve regularly and ensure that the valve is not dirty
NOTICE! The inspection work must be carried out in accordance with the manufacturer's instructions.

Checking the quick vent valve

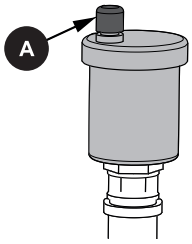

❒ Regularly check all the quick vent valves on the entire heating system for leaks

↳ If any liquid is leaking, replace the quick vent valves

NOTICE! The vent cap (A) must be loose (screw on approx. two revolutions) to ensure correct functioning.

5.3.2 Periodic inspection and cleaning

The boiler must be inspected and cleaned at appropriate intervals depending on the operating hours and fuel quality.

Inspection and cleaning must be repeated after not more than 1500 operating hours or at least once a year. For less efficient fuels (e.g. high ash content) this work needs to be carried out more frequently.

Cleaning the carbonisation gas duct

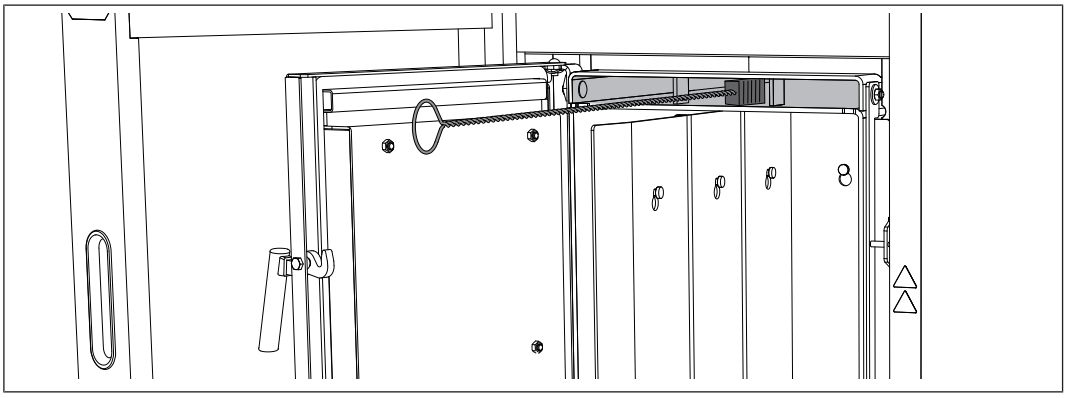

❒ Open the insulated door and the fuel loading chamber door

❒ Switch off the induced draught fan

↳ This prevents damage to the fan from the cleaning brush

❒ Clean the carbonisation gas duct with a small brush

Checking the primary air openings

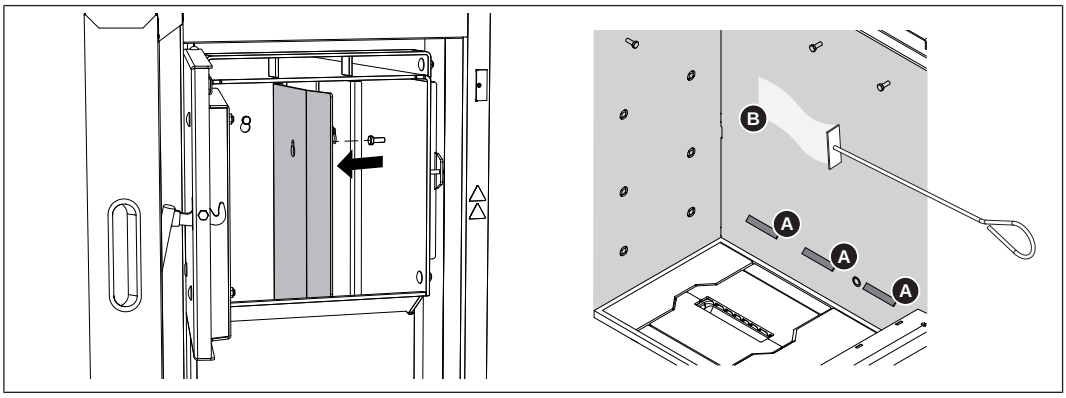

❒ Open the insulated door and the fuel loading chamber door

❒ Unhinge the cladding plates

❒ Check the primary air openings (A) for unobstructed air-flow; clean as required

❒ Clean the inner walls using the flat scraper (B)

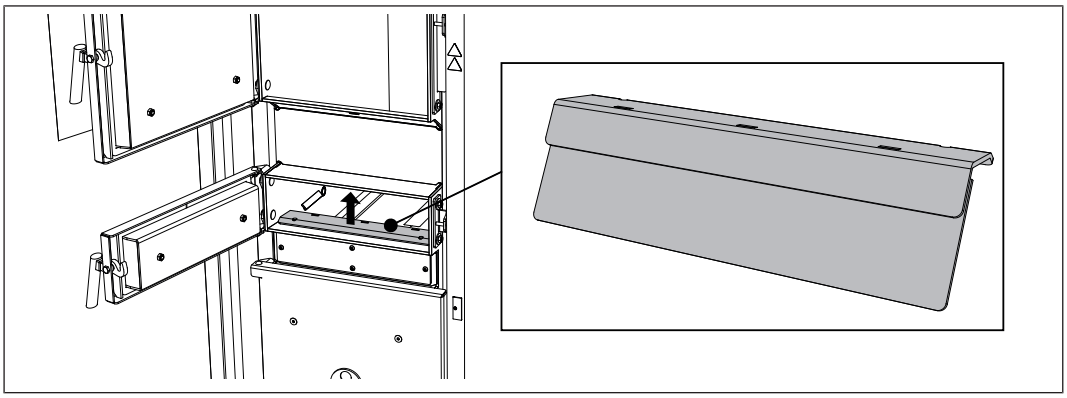

❒ Unhinge the front air guide plate and clean the slits

↳ For cleaning use the door adjusting spanner provided if suitable

Cleaning the heat exchanger pipes

S4 Turbo 22-40

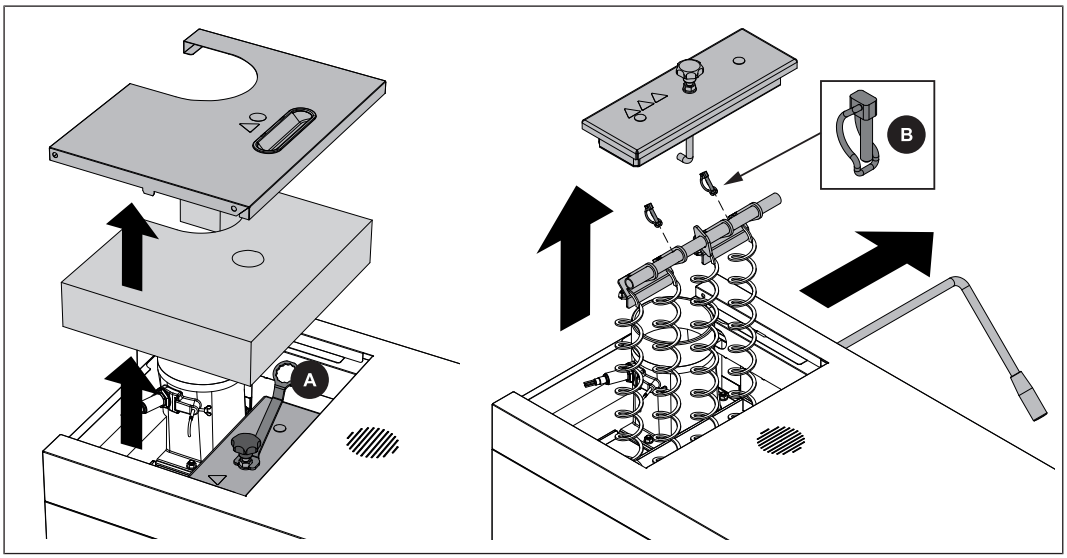

❒ Lift off the back insulating cover and remove the heat exchanger cover

↳ Use spanner (A) provided

❒ Remove the pipe locking pin (B) and take out the WOS lever

❒ Lift out the turbulators together with the mounting bracket

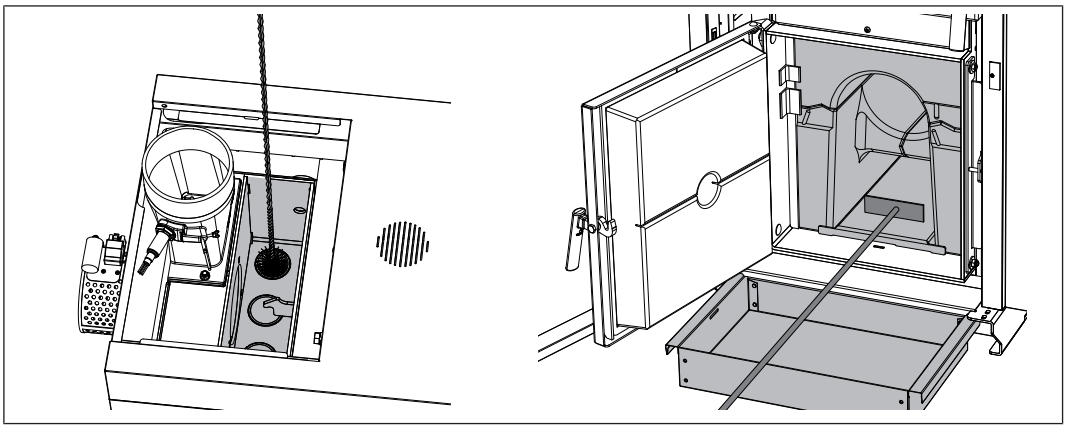

❒ Remove the ash build-up in the pipes using the cleaning brush

↳ The cleaning brush must be pushed all the way through before pulling it up.

↳ The bristles cannot be turned in the pipe.

❒ Push the ash forwards out of the lower channel of the combustion chamber into the ash drawer provided using the furnace tool

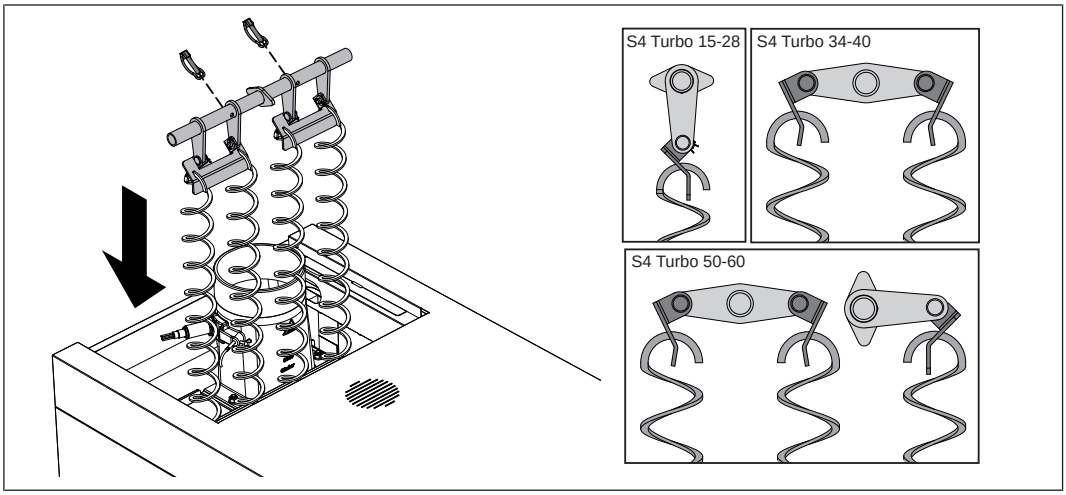

❒ Before fitting in the heat exchanger pipes, check that the WOS springs are correctly hooked into the linking plate

↳ The protruding, canted sheet-metal strips must face upwards and the turbulators must be attached as shown

❒ Thread the turbulators into the heat exchanger pipes

❒ Insert the WOS lever and secure with pipe locking pin

❒ Fit the heat exchanger cover and back insulating cover

S4 Turbo 50-60

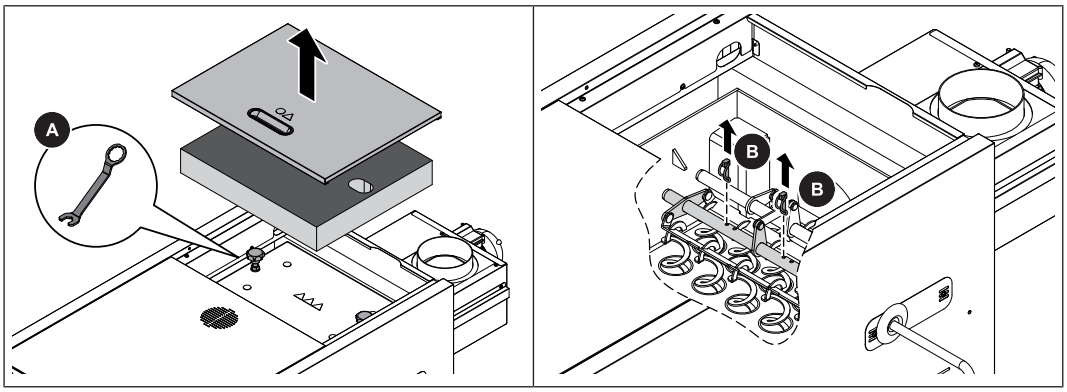

❒ Lift off the back insulating cover and remove the heat exchanger cover

↳ Use spanner (A) provided

❒ Remove both pipe locking pins (B)

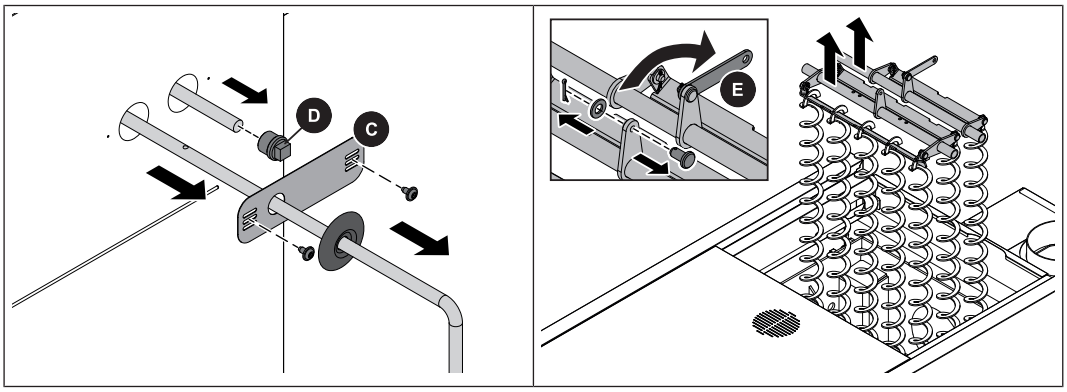

❒ Pull out WOS lever and remove cover plate (C)

❒ Remove blanking plugs (D) and pull out the WOS shaft behind

❒ Loosen carrier plate (E) and lift out the turbulators together with the mounting bracket

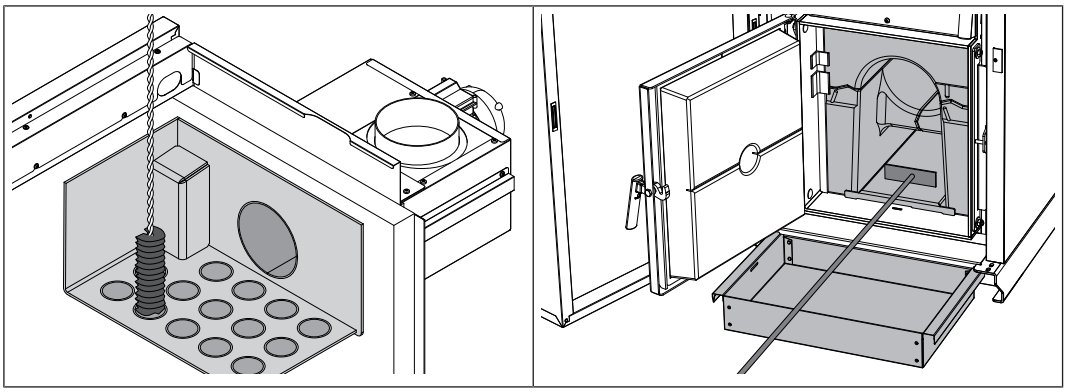

❒ Remove the ash build-up in the pipes using the cleaning brush

↳ The cleaning brush must be pushed all the way through before pulling it up.

↳ The bristles cannot be turned in the pipe.

❒ Push the ash forwards out of the lower channel of the combustion chamber into the ash drawer provided using the furnace tool

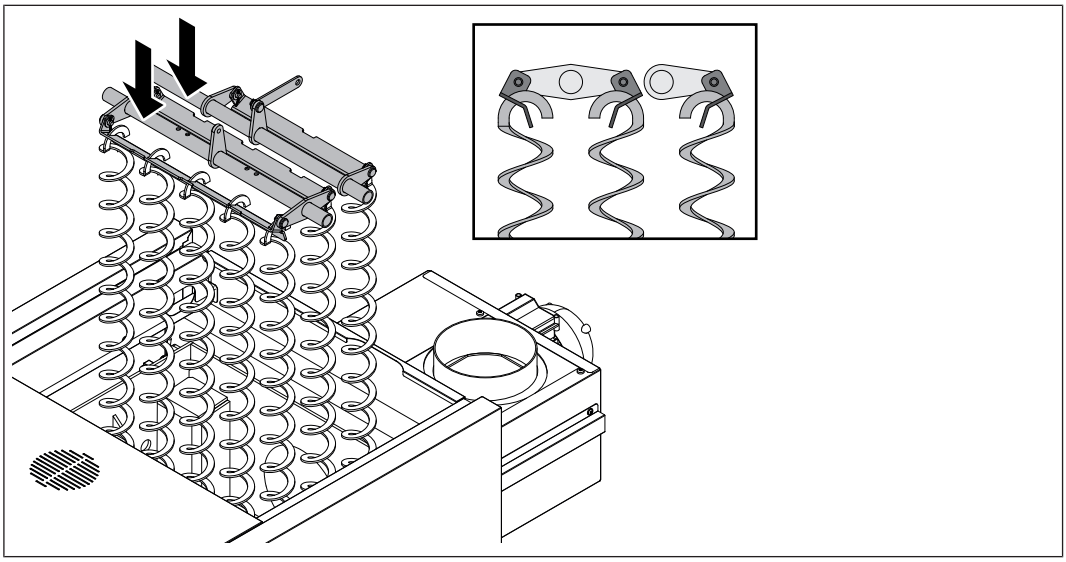

❒ Before fitting in the heat exchanger pipes, check that the WOS springs are correctly hooked into the linking plate

↳ The protruding, canted sheet-metal strips must face upwards and the turbulators must be attached as shown

❒ Thread the turbulators into the heat exchanger pipes and connect to carrier plate

❒ Insert the WOS lever and WOS shaft and secure with pipe locking pin

❒ Fit the heat exchanger cover and back insulating cover

Cleaning the flue gas temperature sensor

S4 Turbo 22-40:

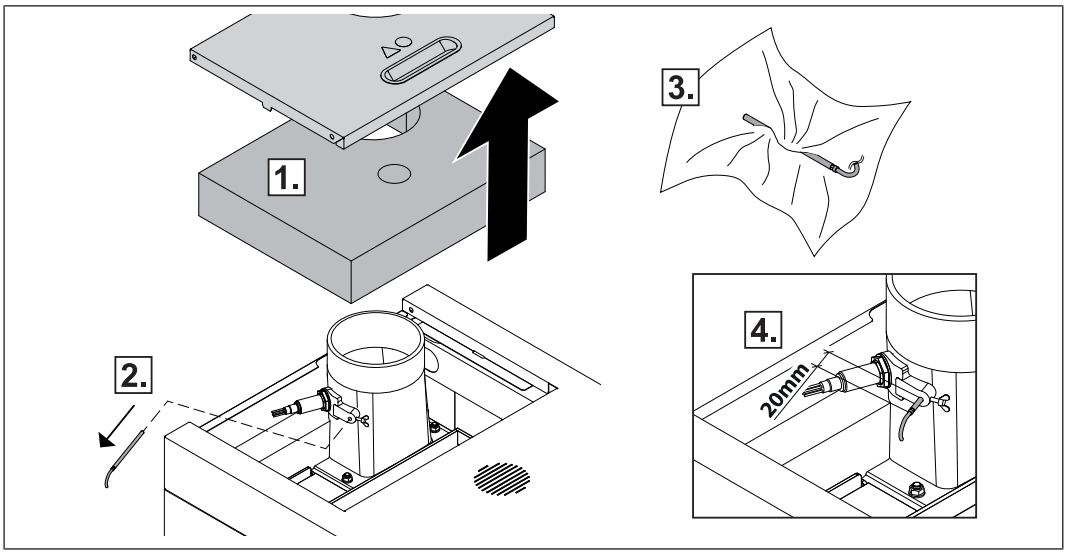

- ❒ Remove the insulating cover and thermal insulation
- ❒ Release the retaining screw and remove the flue gas temperature sensor from the flue gas pipe
- ❒ Wipe the flue gas temperature sensor with a clean cloth
- ❒ Push in the flue gas temperature sensor until about 20 mm of the sensor remains protruding from the bushing and secure with fixing screw

S4 Turbo 50-60:

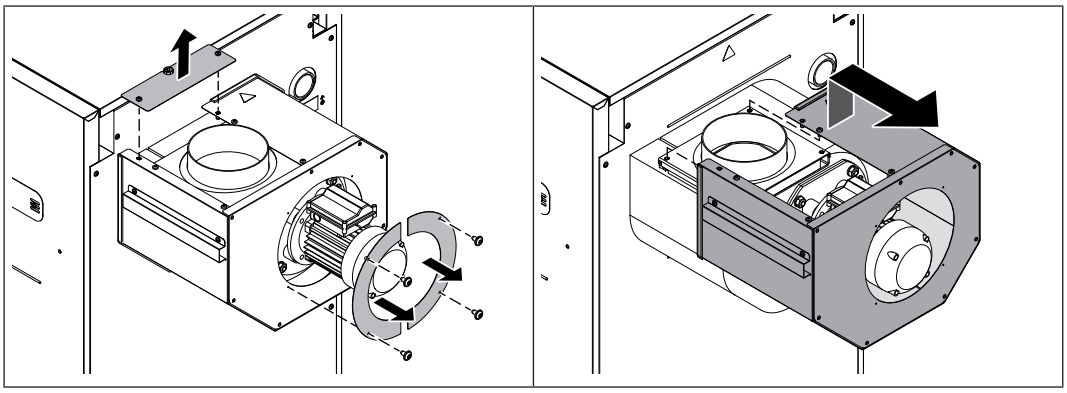

- ❒ Remove the cover behind the flue gas pipe nozzles and induced draught restrictors
- ❒ Undo the screws on the top and pull the housing backwards to remove

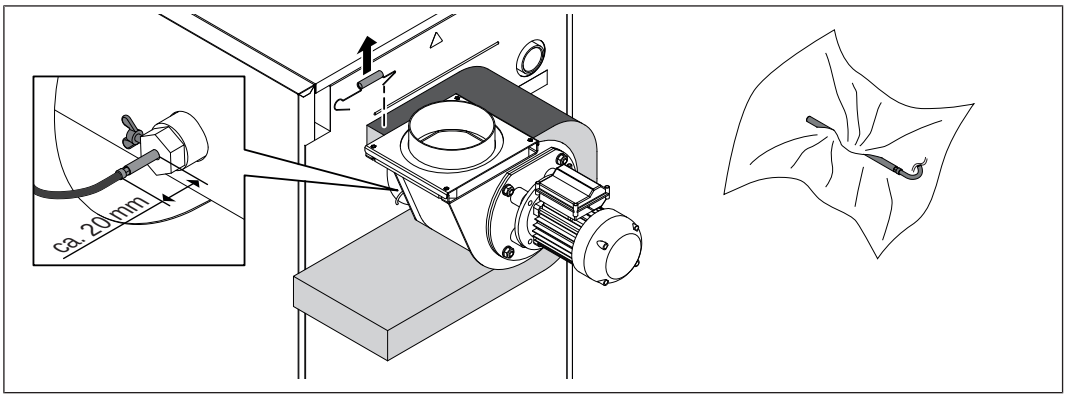

- ❒ Undo the tension springs on the top and remove the thermal insulation
- ❒ Release the retaining screw and remove the flue gas temperature sensor from the flue gas pipe
- ❒ Wipe the flue gas temperature sensor with a clean cloth
- ❒ Push in the flue gas temperature sensor until about 20 mm of the sensor remains protruding from the bushing and secure it with the fixing screw

Cleaning the flue gas pipe

- ❒ Tap on “Boiler OFF” in order to turn off the boiler
- ❒ Switch off the boiler at the main switch and let the boiler cool down for at least one hour

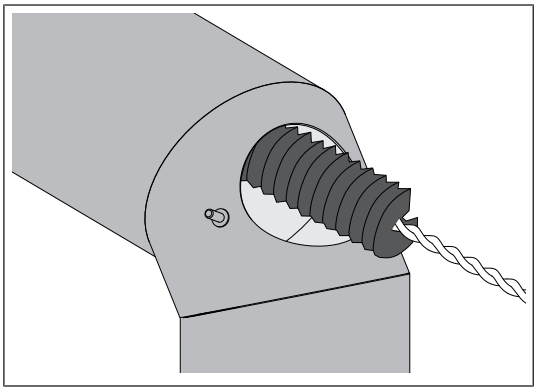

- ❒ Remove the inspection cover on the connecting pipe
- ❒ Clean the connecting pipe between the boiler and chimney with a chimney sweeping brush
  - ↳ Depending on how the flue gas pipes and chimney draught are installed, adjust the cleaning intervals according to the degree of soiling

Checking the draught controller flap

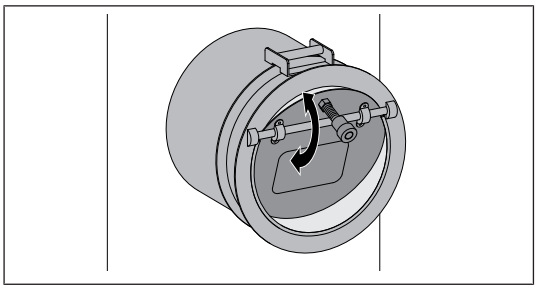

❒ Check that the draught regulation damper moves freely and clean the flap bearing if necessary

Cleaning the induced draught fan

NOTICE! Deposits on the running wheel may imbalance the induced draught, which can generate noise or, in the worst case scenario, lead to bearing damage.

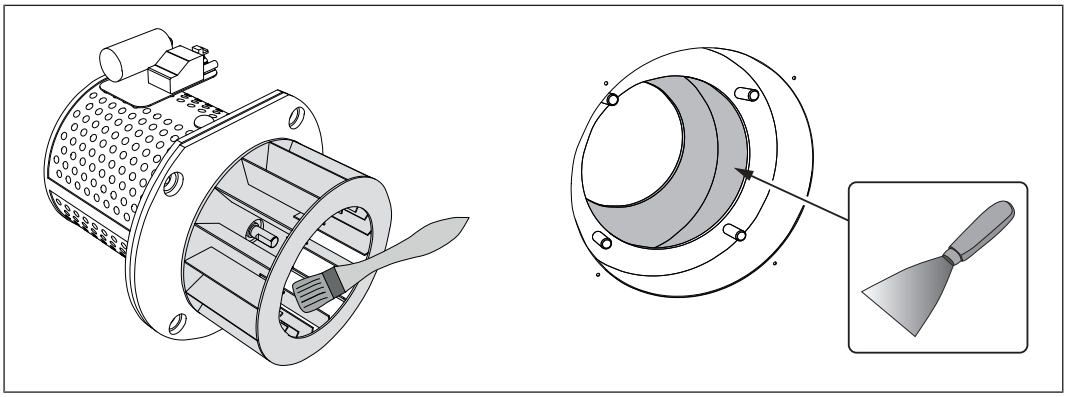

❒ Unplug the connection cable of the induced draught fan

❒ Remove the cover plate for ID fan and induced draught fan on the back of the boiler

❒ Check the seal for damage and replace if necessary

❒ Clean the fan wheel from the inside out using a soft brush or paint brush

NOTICE! Do not move the balancing weights on the blower wheel!

❒ Remove dirt and deposits from the induced draught housing using a scraper

❒ Remove any ash which has gathered using an ash vacuum

❒ Fit the induced draught fan

❒ Plug in the connection cable and secure with cable ties

Checking the seal on the doors

The following steps are illustrated based on the fuel loading door. Perform these steps in the same way for the door of the pre-heating and combustion chamber.

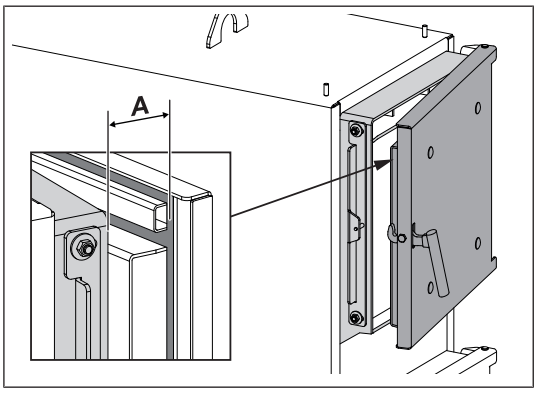

❒ Close the door

- Slight resistance noticeable at a door gap (A) of 2-3 cm:
  It is acceptable to make an adjustment at the hinge side
- No perceptible resistance:
  Move the hinge backwards
  ➲ "Adjusting the doors" [▶ 66]
- If a resistance is felt when there is a gap of 3 cm:
  Move the hinge plate forwards
  ➲ "Adjusting the doors" [▶ 66]

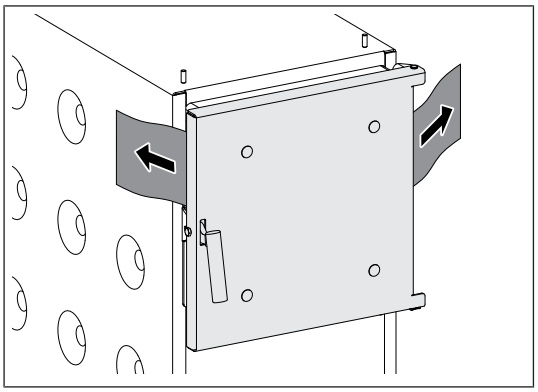

❒ Open the door

❒ Place a sheet of paper on both sides of the door and close the door

❒ Try to pull out the sheet of paper

↳ If the paper cannot be pulled out:
the door is tightly sealed

↳ If the paper can be pulled out:
the door is not sealed properly – move the hinge or the locking plate backwards slightly
➲ "Adjusting the doors" [▶ 66]

Adjusting the doors

The following steps are illustrated based on the fuel loading door. Perform these steps in the same way for the door of the pre-heating and combustion chamber.

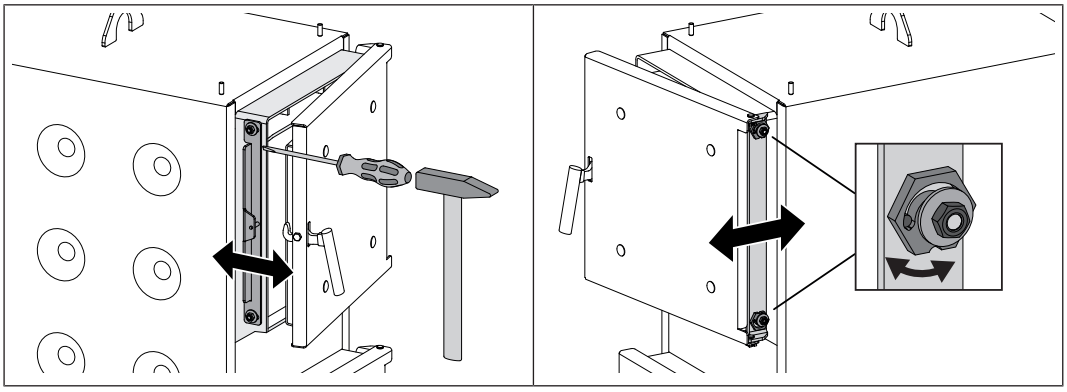

❒ Loosen the nuts on the locking plate

❒ Use a suitable tool, to move the locking plate forwards or backwards

❒ Tighten the nuts on the locking plate

❒ Loosen the nuts on the door hinge

❒ Use a hexagonal wrench (width across flats 32 mm) to move the locking cam (B) forwards or backwards

❒ Tighten the nuts on the hinge

IMPORTANT: Align the locking plate and hinge identically at the top and bottom

❒ Once the doors have been adjusted, check them again for leaks, ➲ "Checking the seal on the doors" [▶ 65]

5.3.3 Maintenance of the electrostatic particle separator in the flue gas line (optional)

The electrostatic particle separator must be inspected and cleaned at appropriate intervals depending on the operating hours and fuel quality.

Inspection and cleaning must be repeated after no more than 300 operating hours or at least once a month. With less fuels of lower efficiency (for instance with a high ash content) this work needs to be carried out more frequently.

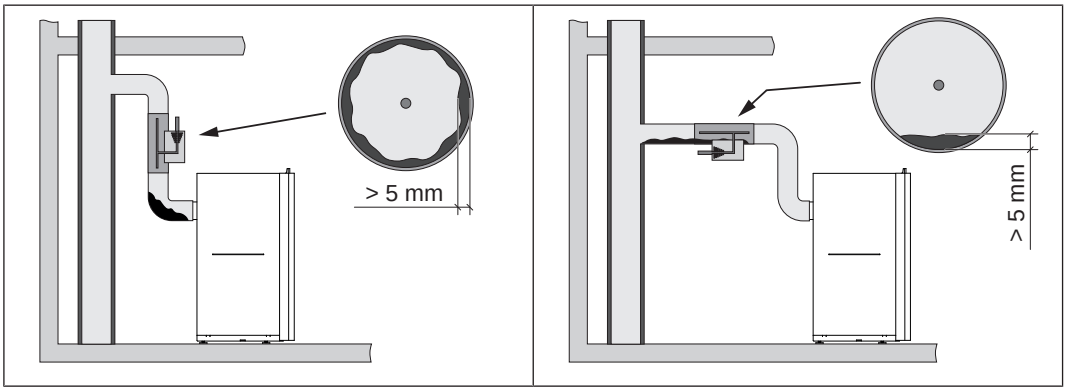

- ❒ Check the entire exhaust duct before and after the electrostatic particle separator for contamination
- ❒ If there are visible deposits larger than 5 mm, clean the flue gas line in accordance with the manufacturer's instructions for the electrostatic particle separator

5.4 Maintenance work by technicians

⚠ CAUTION

If maintenance work is carried out by untrained personnel:

Risk of personal injury and damage to property!

The following applies for maintenance:

❒ Observe the instructions and information in the manuals

❒ Only allow appropriately qualified personnel to work on the system

Only qualified staff are permitted to carry out maintenance work in this chapter:

- Heating technicians / building technicians
- Electrical installation technicians
- Froling customer services

The maintenance staff must have read and understood the instructions in the documentation.

NOTICE! We recommend a yearly inspection by Froling customer services or an authorised partner (third party maintenance).

Regular maintenance and servicing by a heating specialist will ensure a long, trouble-free service life for your heating system. It will ensure that your system stays environmentally-friendly and operates efficiently and cost-effectively.
In the course of this maintenance the entire system is inspected and optimised, particularly regulation and control of the boiler. The emission measurement carried out can also be used to draw conclusions about the combustion performance of the boiler. For this reason, FROLING offers a service agreement, which optimises operating safety. Please see the details in the accompanying guarantee certificate.

Your Froling customer service office will also be happy to advise you.

NOTICE

All national and regional regulations relating to regular testing of the system must be observed. Please be advised that, in Austria, commercial systems with a rated heat output of 50 kW or more must be regularly tested at yearly intervals in accordance with the Heating Plant Regulations (Feuerungsanlagen-Verordnung).

5.4.1 Cleaning the Lambda probe

S4 Turbo 22-40:

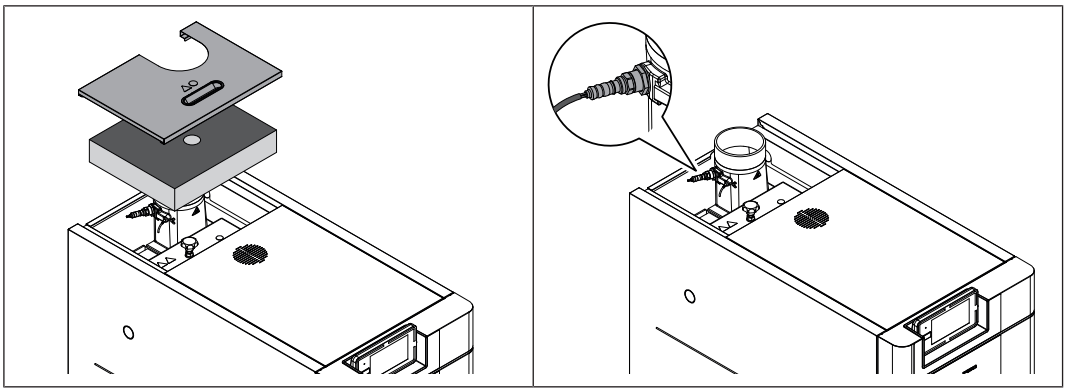

❒ Remove the back insulating cover and thermal insulation upwards

S4 Turbo 50-60:

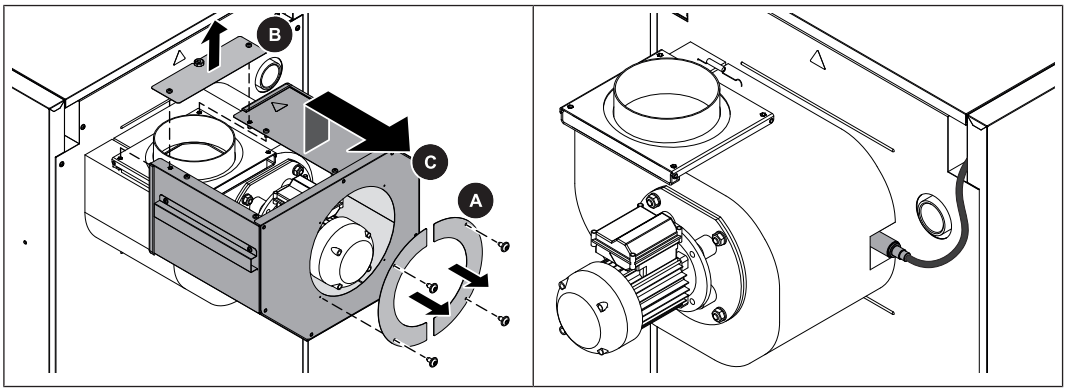

❒ Remove the cover plates for ID fan (A), rear cover (B) und housing (C)

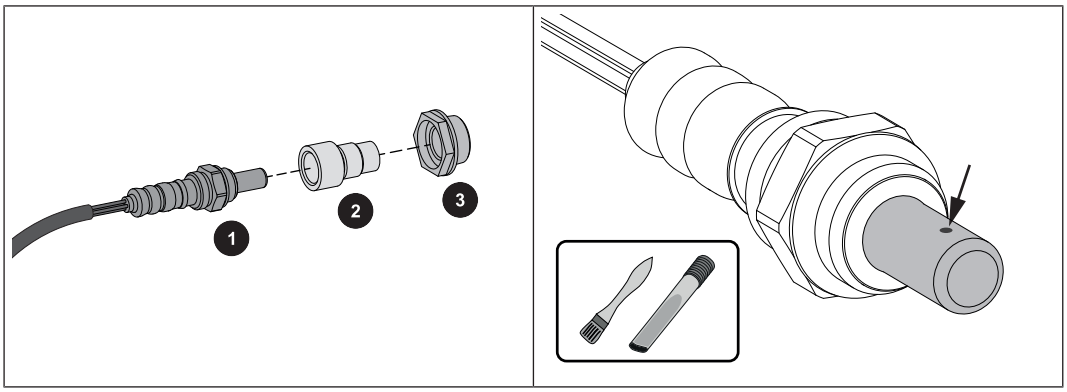

❒ Carefully remove the Lambda probe (1), adapter (2) and plastic bushing (3)

↳ Pay attention to the cables of the Lambda probe!

❒ Carefully remove impurities from the measuring ports with a fine brush and ash vacuum

↳ Hold the Lambda probe with the tip downwards so that deposits can fall out of the measuring ports

❒ Check the adapter (2) and plastic bushing (3) for dirt and cracks, replace if necessary

↳ IMPORTANT: The seal surface of the plastic bushing must lie flat after assembly

CAUTION:

- Do not clean the Lambda probe with compressed air
- Do not use chemical cleaning agents (brake cleaner, etc.)
- Handle the Lambda probe carefully, i.e. do not “tap” it or use a wire brush to clean it

5.5 Emissions measurement by chimney sweep or regulatory body

Various legal regulations stipulate that heating systems must be inspected periodically. In Germany this is regulated by the First Federal Emissions Protection Ordinance (BimSchV) in the last amended version, and in Austria by various state laws.

The following minimum requirements must be met by the operator of the system for a successful measurement:

- ❒ Thoroughly clean the boiler 2 heating days (1 heating day = 1 day during which the boiler to be measured is in operation) before the measurement
- ❒ Ensure there is adequate fuel
  - ↳ Only use fuels of high quality which meet the requirements as stipulated in the boiler operating instructions (“Permitted fuels” chapter)
- ❒ Ensure that there is adequate heat consumption on the day of the measurement (e.g. storage tank must be able to take heat for the duration of the measurement)
- ❒ There must be a suitable measuring port in the straight flue gas pipe for the measurement. The measuring port must be twice the flue gas pipe diameter away from the last upstream bend.
  - ↳ If the measuring port is not correctly positioned, the measuring result will be distorted

5.5.1 General information on measurement

Observe the following basic conditions:

- ❒ Only use fuel permitted according to the operating instructions
  - ↳ Ensure that the water content (w) is greater than 15% and less than 25%

- ❒ Use short split wood (edge length EL < 10 cm) to create the measuring conditions and for the measurement itself

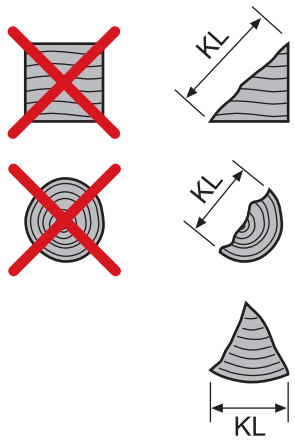	Short split wood with an edge length EL < 10 cm The term “short split wood” has been defined in these instructions by Froling; there is no fuel standard or similar guidelines for this.

- ❒ The fuel must be dry, clean and uncontaminated (not painted, glued, etc.)
- ❒ The combustion process must not be interrupted during the measurement
  Interruptions to the combustion process include:
  - Opening the boiler doors
  - Stoking the burning material
  - Switching off the ID fan (e.g. because of inadequate heat consumption)

5.5.2 Create the measurement conditions and perform the measurement

- ❒ Fill the boiler approx. 1/4 full with small pieces of split wood in accordance with the operating instructions and heat up
  - ↳ TIP: The smaller the wood is split, the better and faster the bed of embers forms
- ❒ Ensure that the operating conditions are fulfilled
  - ↳ Return temperature min. 60 °C, boiler temperature min. 70 °C, chimney draught in the range of 8-10 Pa

NOTICE! Exception for return temperature: Boiler with Thermovar valve and valve core 55°C (boiler manufactured before 2010)

- ❒ Allow the fuel to burn off until a basic firebed is achieved
  - ↳ This will take at least one hour depending on the fuel used and the power consumption
- ❒ Open the fuel loading door, distribute the embers evenly with the furnace tool and gauge the height of the embers
  - ↳ The top row of holes in the combustion chamber guards must be visible
- ❒ Close the fuel loading door

Once the basic firebed has been achieved (top row of holes visible in the combustion chamber guards, the two lower rows of holes of the combustion chamber guards are covered with embers):

- ❒ With the doors closed, press the chimney sweep button (boiler with button display) or activate chimney sweep function (boiler with touchscreen) and select the menu item “FW nominal load”
  - ↳ The boiler temperature setpoint will be automatically set to 85°C for the duration of the measurement
  - ↳ All of the configured heating circuits will be activated at maximum flow temperature for the duration of the measurement
- ❒ Open the fuel loading door and fill the boiler with the maximum permitted amount of fuel
  - ↳ If the boiler has activated reload calculation, the amount of fuel required will be shown on the screen
- ❒ Close the doors and wait approx. 10 minutes until the combustion process is under way
- ❒ Take the measurement at the designated measuring port
  - ↳ The ready-to-measure state is shown on the display
  - ↳ Regularly check the that the conditions are stable:
    - Boiler temperature > 70 °C
    - Flue gas temperature around 170 °C

5.6 Replacement parts

With Froling original replacement parts in your system, you are using parts that match perfectly. As the parts fit together so well, installation times are shortened and a long service life is maintained.

NOTICE

Installing non-original parts will invalidate the guarantee.

❒ Only replace components or parts with original replacement parts.

5.7 Disposal information

5.7.1 Disposal of the ash

Austria: ❒ dispose of ash in accordance with the Waste Management Act (AWG)

Other countries: ❒ dispose of ash in accordance with local regulations

5.7.2 Disposal of system components

❒ Ensure that they are disposed of in an environmentally friendly way in accordance with waste management regulations in the country (e.g. AWG in Austria)

❒ You can separate and clean recyclable materials and send them to a recycling centre.

❒ The combustion chamber must be disposed of as builders' waste.

6 Troubleshooting

6.1 General fault with power supply

Error characteristics	Cause of error	Elimination of error
Nothing is shown on the display	General power failure	
No power to the controller	Main switch is turned off FI-protective circuit breaker, power line protection or SPS power line protection tripped	Turn on the main switch Switch on the protective circuit breaker

6.1.1 Behaviour of system after a power failure

When the power supply has been restored, the boiler returns to the previous mode and is controlled according to the specified program.

❒ **After a power failure, check whether the STL (high-limit thermostat) has tripped.**

❒ **Keep the doors of the boiler closed during and after the power failure, at least until the induced draught fan automatically starts up again.**

6.2 Extra cleaning of flue gas paths

Error characteristics	Possible cause	Elimination of error
Extra cleaning required due to very sticky, black deposits in the flue gas paths Noticeably shorter cleaning intervals	Using fuels with a water content less than 15%	Optimise air duct by adjusting the boiler controller
	Use of fuels with a water content above 25%	Use fuel with lower water content

❒ Navigate to the “General Settings” menu

↳ Activate the parameter “SH w<15%” in the “Fuel selection” menu

NOTICE! See operating instructions for boiler controller!

NOTICE! If you have any questions, please contact Froling customer services or your installer!

6.3 Excessive temperature

The high-limit thermostat (STL) switches off the blower fan at a maximum boiler temperature of 105 °C. The pumps continue to run.

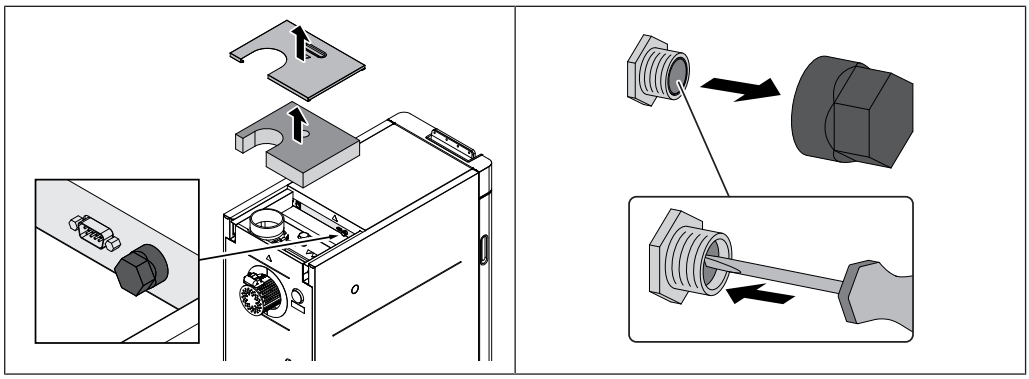

Once the temperature falls below approx. 75°C, the STL can be reset mechanically.

❒ Unscrew the cap on the STB (high-limit thermostat)

❒ Unlock the STL by pressing with a screwdriver

6.4 Faults with fault message

If a fault has occurred and has not yet been cleared:

❒ Status LED indicates the nature of the fault
- Orange flashing: Warning
- Red flashing: Error or alarm

❒ A fault message is shown on the display

The term "fault" is a collective term for warnings, errors and alarms. The boiler reacts differently to the three types of message:

WARNING	In case of warnings the boiler initially continues controlled operation, giving the option of resolving the error quickly to prevent a shutdown.
ERROR	The boiler follows the shutdown procedure and remains in "Off" status until the problem is resolved.
ALARM	An alarm triggers a system emergency stop. The boiler shuts down immediately, the heating circuit controller and pumps remain active.

6.4.1 Procedure for fault messages

If a fault occurs on the boiler, it will be shown on the display.

If the fault is acknowledged, although it has not been rectified, the window with the associated fault can be reopened as follows:

Open error display

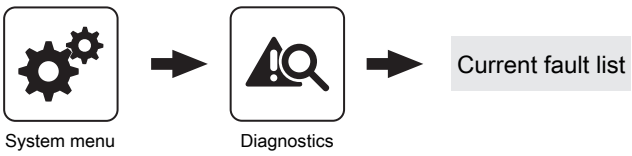

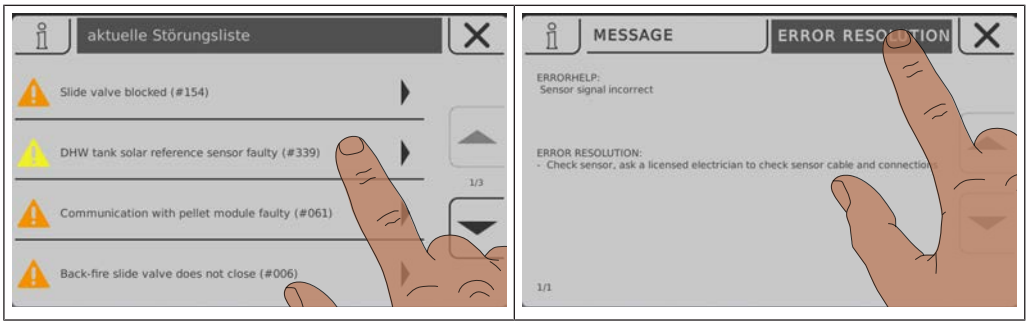

The error display lists all current faults

- ❒ Open by tapping the listed fault
- ❒ The “Message” tab displays the current fault.
- ❒ Press the “Error resolution” tab to view possible causes and troubleshooting procedures

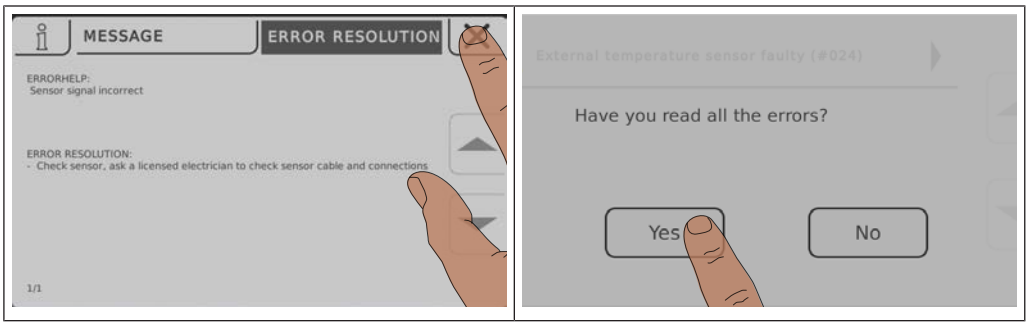

- ❒ Tap the Cancel icon to close the current fault and display the fault list
- ❒ Tap the Cancel icon again and confirm that you have read all of the errors to return to the basic display
  - ↳ The boiler is in the previously set mode

Notes

Manufacturer's address

Fröling Heizkessel- und Behälterbau GesmbH

Industriestraße 12
A-4710 Grieskirchen
+43 (0) 7248 606 0
info@froeling.com

Zweigniederlassung Aschheim

Max-Planck-Straße 6
85609 Aschheim
+49 (0) 89 927 926 0
info@froeling.com

Froling srl

Via J. Ressel 2H
I-39100 Bolzano (BZ)
+39 (0) 471 060460
info@froeling.it

Froling SARL

1, rue Kellermann
F-67450 Mundolsheim
+33 (0) 388 193 269
froling@froeling.com

Installer's address

Stamp

Froling customer services

Austria	**0043 (0) 7248 606 7000**
Germany	**0049 (0) 89 927 926 400**
Worldwide	**0043 (0) 7248 606 0**

www.froeling.com