Johnson & Starley

Publication No. ZZ 1311-2 August 2008
Product Identification No: 87B 074

RenoXtra

COMBI SERIES

Xtra High Efficiency Combination Boilers

INSTALLATION, MAINTENANCE & SERVICING INSTRUCTIONS

Natural Gas G20:

RenoXtra 30C - GC No: 47-416-05
RenoXtra 37C - GC No: 47-416-06

Propane G31 Variant:

RenoXtra 30CP - GC No: 47-416-07
RenoXtra 37CP - GC No: 47-416-08

WRAS APPROVED PRODUCT

CE

Advantica BS EN ISO 9001 : 2000 — UKAS QUALITY MANAGEMENT 079

energy saving recommended

The Johnson & Starley Reno range has an energy rating A on a scale of A to G.
For more information see www.boilers.org.uk
This is a certification mark.

RELIABILITY YOU CAN TRUST

www.johnsonandstarley.co.uk

CONTENTS

1.	Features	3
2.	Brief Description	3
3.	Building Standards & Regulations	4
4.	Safety & Gas Information	4
5.	Preparation	5
6.	Technical Data	5
7.	Dimension & Positioning	7
8.	Heating System	8
9.	Fitting	11
10.	Flue Instructions	12
11.	Condensate Drain	20
12.	Electrical	21
13.	Functional Flow Diagram	22
14.	Wiring Diagram	23
15.	Commissioning	24
16.	Handing Over	24
17.	Servicing	25
18.	Defect Diagnosis	27
19.	Fault Finding	29
20.	Parts Replacement	30
21.	List of Spares	34
22.	Exploded Diagram	35
23.	Important Information	36
24.	Benchmark Checklist & Service Record	37

THE BENCHMARK SCHEME

In order to comply with Building Regulations Part L (Part J in Scotland) the boiler MUST be fitted in accordance with the manufacturer's instructions.

Benchmark places responsibilities on both manufacturers and installers. The purpose is to ensure that customers are provided with the correct equipment for their needs, that it is installed, commissioned and serviced in accordance with the manufacturer's instructions by competent persons and that it meets the requirements of the appropriate Building Regulations. The Benchmark Checklist can be used to demonstrate compliance with Building Regulations and should be provided to the customer for future reference.

Installers are required to carry out installation, commissioning and servicing work in accordance with the Benchmark Code of Practice which is available from the Heating and Hotwater Industry Council who manage and promote the Scheme.

Visit www.centralheating.co.uk for more information.

benchmark
COLLECTIVE MARK
THE MARK OF QUALITY FOR THE INSTALLATION, COMMISSIONING AND SERVICING OF DOMESTIC HEATING AND HOT WATER SYSTEMS

PLEASE READ THESE INSTRUCTIONS CAREFULLY BEFORE STARTING INSTALLATION

LEAVE THESE INSTRUCTION WITH THE USER OR AT THE GAS METER AFTER INSTALLATION

In the interest of continuous development Johnson and Starley reserve the right to change specification without prior notice Johnson and Starley prides itself on it's ability to supply spare parts quickly and efficiently.

If your service engineer indicates a problem in obtaining a spare part, advise him to contact Johnson and Starley Spares Department.

1. FEATURES

Appliance Classification.

This appliance is certified as a type C13, C33, C53.

FEATURES

1 Warm Water Return
2 Cold Water supply
3 Flue Turret
4 Gas Saver Unit
5 Expansion Vessel
6 Ignition Electrode
7 Fan/Venturi Assembly
8 Electrical Connection Harness
9 Trap Assembly
10 Shock Arrester
11 Blending Valve
12 Pump
13 Pressure Transducer
14 CBVC
15 Detector Electrode
16 Gas/Air Duct
17 Heat Exchanger

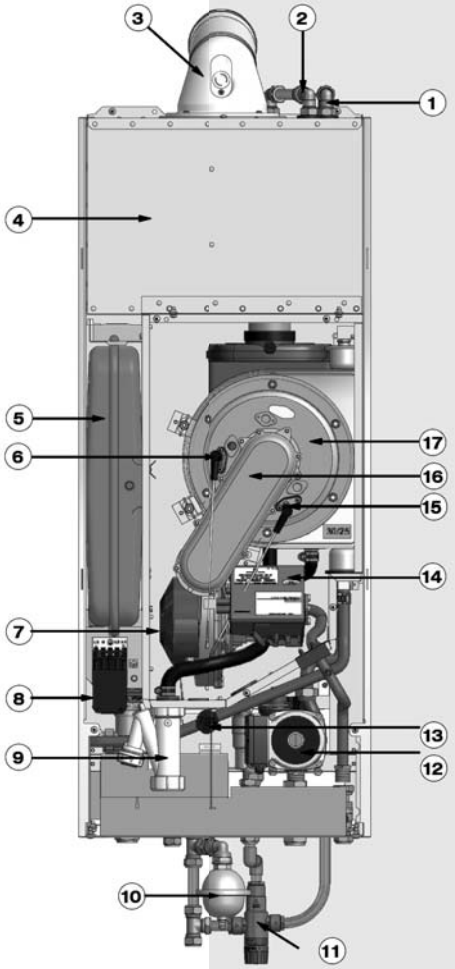

FIGURE 1
RENOXTRA FEATURES

2. BRIEF DESCRIPTION

CONTENTS CARTON 1		CONTENTS CARTON 2		CONTENTS CARTON 3	
1	Wall Plate	1	RenoXtra 30C or RenoXtra 37C Boiler	1	Gas Saver
2	Side Panels	2	Blending Valve, Shock Arrestor and Elbows		
3	Front Door Panel	3	Control Module (including MMI, display and controls)		
4	Paper Template	4	Wall Jig		
5	Raw plug/Screw Pack	5	Installation Instructions (inc. Benchmark Logbook)		
Table 1		6	Users Instructions		
		7	Guarantee Card		

2.1 The RenoXtra appliance is a high efficiency combination boiler that is designed to provide the use with both central heating and domestic hot water on demand. Its design is such that it is room sealed, taking combustion air from outside and expelling the products of combustion to the outside again. The heat exchanger is constructed of stainless steel, which is corrosion free. Flueing options ensure that the appliance can be installed in many locations within a building.

2.2 The appliance is controlled by fully featured microprocessor based electronics that monitor each of the operational procedures. An LCD display indicates the operational state of the appliance which illuminates for a short period when the user control is operated. This starts with the full sequence automatic ignition and continues with monitoring the demand requirements of either the central heating or the domestic hot water.

2.3 Whilst the appliance is in pre-heat mode it maintains a limited temperature in the heat exchanger in order to quickly satisfy any domestic hot water demand. Should any fault occur the appliance will be shutdown to a safe condition with the fault code being displayed on the LCD panel.

3. BUILDING STANDARDS & REGULATIONS

This appliance must be installed in accordance with the current editions of:

- Building Standards (Scotland) (Consolidation) Regulations.
- Building Regulations
- Gas Safety (Installation and Use) Regulations (as amended)
- BS 7671 Institute of Electrical Engineers (I.E.E) Wiring Regulations
- BS 6891 Installation of Low Pressure Gas Pipework of up to 28 mm (R1) in domestic premises (2nd family gases).
- BS 5440 Pt. 1 (Flues for Gas Appliances)
- BS 5440 Pt. 2 (Air Supply for Gas Appliances)
- Model and Local Authority Byelaws
- BS 5546 Installation of Domestic Hot Water Supplies

This appliance has been Tested and Certified in order to meet the necessary European Directives and comply with the latest Building Regulations, including the efficiency requirements of the SEDBUK scheme.

Efficiency of Hot Water Boilers Directive	92/42/EEC
Gas Appliance Directive	90/396/EEC
Low Voltage Directive	93/68/EEC
Electromagnetic Compatibility Directive	92/31/EEC

No modifications to this appliance should be made, unless they are fully approved by the manufacturer.

The manufacturers instructions supplied must not be taken as overriding any statutory requirements.

A two year manufacturers warranty applies to this appliance.

It is important that the system is flushed thoroughly before the appliance is left to operate (as recommended in BS 7593) in order to maintain an efficiently operating heating system. For replacement installations, the system MUST be flushed with the old boiler in situ, in order to prevent the Reno becoming a trap for system debris. Once the system has been flushed, an inhibitor (suitable for stainless steel heat exchangers) should be added. Appropriate inhibitors are available, for example Sentinel, Fernox and Salamader.

Failure to carry out the above procedure will invalidate the guarantee!

4. SAFETY & GAS INFORMATION

4.1 SAFETY INFORMATION

4.1.1 Ensure the mains supply voltage, frequency, number of phases and power rating comply with details on the rating label.

4.1.2 All wiring must be in accordance with the appropriate standards. The equipment must be supplied with a double pole isolator switch.

4.1.3 Ensure safety regulations and practices are adhered to when installing and using this equipment

4.1.4 The weight of this appliance exceeds that recommended for a one-man lift. It will therefore be necessary to gain assistance at times during the installation procedure.

4.1.5 It should be noted that this appliance may contain sharp edges. Care MUST be taken when handling the appliance to prevent injury. We advise the engineer to wear suitable P.P.E.

4.1.6 Once the appliance has been fired beware that certain parts will be hot to the touch.

4.1.7 Do not install flues during rain, high winds or in severe weather conditions.

4.2 GAS INFORMATION

4.2.1 Gas Categories

a. The appliance is certified as a CAT II 2H 3P appliance. This allows conversion between Natural gas (G20) and LPG (G31). Their supply pressures are 20 mbar and 37 mbar respectively.

b. For Natural gas to LPG conversion kit number: NG30 (complete with instructions) is available.
c. For LPG to natural gas conversion kit number LPG30 (complete with instructions) is available.

4.2.2 Gas Supply

a. The gas installation must be completed in accordance with the relevant standards (BS 6891).
b. The supply must be capable of providing a steady inlet working pressure to the appliance of 20 mbar at a rate of 3.2 m^3/h (RenoXtra 30C) or 3.92 m^3/h (RenoXtra 37C) (Calculated with a Gas CV of 38.7 MJ/m^3)
c. The installation must be tested for gas tightness using suitable methods. The Pipework should also be purged of air in accordance with the IG Publication Standard.

GAS LEAKS

DO NOT OPERATE ANY ELECTRICAL SWITCHES, OR USE A NAKED FLAME TURN OFF THE GAS SUPPLY. VENTILATE THE AREA BY OPENING DOORS AND WINDOWS. CALL THE NATIONAL GAS EMERGENCY SERVICE ON 0800 111999

5. PREPARATION

5.1 Make sure all the electrical cables are in place.
5.2 Water connections.
5.3 Gas connections are in place.
5.4 The wall surface where boiler is being fixed is smooth and flat.
5.5 Giving consideration to the flue position.
5.6 Give consideration to the overall height.

	RenoXtra 30C	RenoXtra 37C
Maximum Lift Weight	34.45 kg	36.5 kg
Gas Connection	15 mm copper	
Domestic hot water	15 mm copper	
Heating flow and return	22 mm copper	
Safety valve discharge	15 mm copper	
Condensate Drain	21.5mm plastic overflow pipe	
Maximum heating system water content using fitted expansion vessel, pressurised at 1 bar.	73 Litres	
Electrical supply	230V	
Electrical rating	145W	
IP classification	IP 40	
External fuse rating	3 A	
Expansion vessel capacity	8 Litres	
Expansion vessel initial charge pressure	1.0 bar	
Heating system minimum pressure	0.7 bar	
DHW max. inlet pressure	5 bar	
Minimum inlet pressure for maximum DHW flow rate	1.0 bar	
Minimum inlet pressure for appliance to operate	0.2 bar	
Maximum DHW flow rate at 35° rise	12.3 l/m	15.9 l/m
Minimum domestic hot water flow rate	2.2 l/m	
Maximum flow temperature.	63°C	
DHW Specific Rate	14.3 l/min	18.6 l/m
Ball valves are fitted in water and gas connections		
For larger systems use an additional expansion vessel		

TABLE 2
GENERAL DATA

6. TECHNICAL DATA

RenoXtra		NATURAL GAS G20				LPG G31			
		30C	37C	30C	37C	30C	37C	30C	37C
		MAXIMUM		MINIMUM		MAXIMUM		MINIMUM	
RANGE RATING (kW) OUTPUT		30.0	37.1	7.0	9.0	30.0	37.1	7.0	9.0
OFFSET (PASCAL)		-3.0 (Minus Three)**							
BURNER CO2(%)	CASE OFF	9.3*	9.5*	8.4**	8.5**	10.2**	10.2**	9.4**	9.2**
	CASE ON	9.5*	9.8*	8.6**	8.8**	10.4**	10.5**	9.6**	9.5**
		*** = +0.5 ** = Ref Only**							
MAXIMUM GAS RATE	m³/h	3.2	3.92	0.74	0.95	1.28	1.56	0.30	0.34

TABLE 3
PERFORMANCE DATA

RenoXtra			NATURAL GAS G20				LPG G31			
			30C	37C	30C	37C	30C	37C	30C	37C
			MAXIMUM		MINIMUM		MAXIMUM		MINIMUM	
CH INPUT Q	NET	kW	25.5	30.7	7.14	9.18	26.06	30.7	7.29	9.18
	GROSS	kW	28.3	34.0	7.92	10.1	28.3	33.3	7.92	9.97
GAS CONSUMPTION		m³/h	2.6	3.16	0.74	0.85	1.06	1.25	0.30	0.38
CH OUTPUT	NON CONDENSING	kW	24.8	30.0	6.95	9.0	25.0	30.0	7.0	9.0
	CONDENSING	kW	27.85	32.6	7.76	9.8	27.85	32.6	7.76	9.8
SEASONAL EFFICIENCY (SEDBUK)							'A'			
NOX CLASSIFICATION							CLASS 5			
CENTRAL HEATING SETPOINT TEMPERATURE RANGE							20 - 82˚C			

TABLE 4
PERFORMANCE DATA (CENTRAL HEATING)

RenoXtra			NATURAL GAS G20				LPG G31			
			30C	37C	30C	37C	30C	37C	30C	37C
			MAXIMUM		MINIMUM		MAXIMUM		MINIMUM	
DHW INPUT Q	NET	kW	30.6	38.0	7.14	9.18	31.3	38.0	7.29	9.18
	GROSS	kW	34.0	42.1	7.92	10.19	34.0	41.3	7.92	9.97
GAS CONSUMPTION		m³/h	3.2	3.92	0.74	0.95	1.28	1.56	0.30	0.34
DHW OUTPUT		kW	30.0	37.1	7.0	9.0	30.0	37.1	7.0	9.0

TABLE 5
PERFORMANCE DATA (DOMESTIC HOT WATER)

PLEASE NOTE:
Natural Gas (G20) consumption is calculated using gross CV of 38.7 MJ/m³ or 34.9 MJ/m³ net.

LPG (G31) consumption is calculated using gross CV of 95.6 MJ/m³ or 88.0 MJ/m³ net.

7. DIMENSIONS & POSITIONING

7.1 DIMENSIONS AND CLEARANCES

It is recommended that where the appliance is located in a kitchen, or next to other combustible materials, a gap of 5mm be left on either side and where the flue run is through a void in kitchen units, again a minimum gap of 5mm should be left. For the purpose of servicing, it is also recommended that the appliance be located with a minimum gap of 200mm above any surface.

7.2 APPLIANCE LOCATION

7.2.1 The appliance is not suitable for external installation unless it is protected from the elements by a suitable enclosure. The enclosure must provide the required clearances for installation, servicing and maintenance as well as the correct level of ventilation. The selected position should allow for a suitable flue system to be installed.

7.2.2 When installed in a timber frame building guidance should be taken from the gas industry publication IGE/UP-7 (Guide for Gas Installations in Timber Frame Housing).

7.2.3 BS 6798 gives details of the essential features for a compartment or cupboard where a gas appliance is to be installed. An existing cupboard may require modification.

7.2.4 If the appliance is installed in a room containing a bath or shower it is important to locate the electrical switch in a position where it cannot be touched by anyone using the bath or shower. The current IEE Wiring Regulations (BS 7671) for England and the electrical provision of the Building Regulations for Scotland gives details.

7.2.5 Room ventilation for the appliances not necessary as the appliance draws its combustion air from outside of the building and cupboard or compartment ventilation is not necessary providing that the minimum clearances are maintained. However, reference should be made to BS 5440 Pt. 2.

KITCHEN FRONT VIEW

*** Note:** 200mm dimension is a desired workable clearance but can be reduced

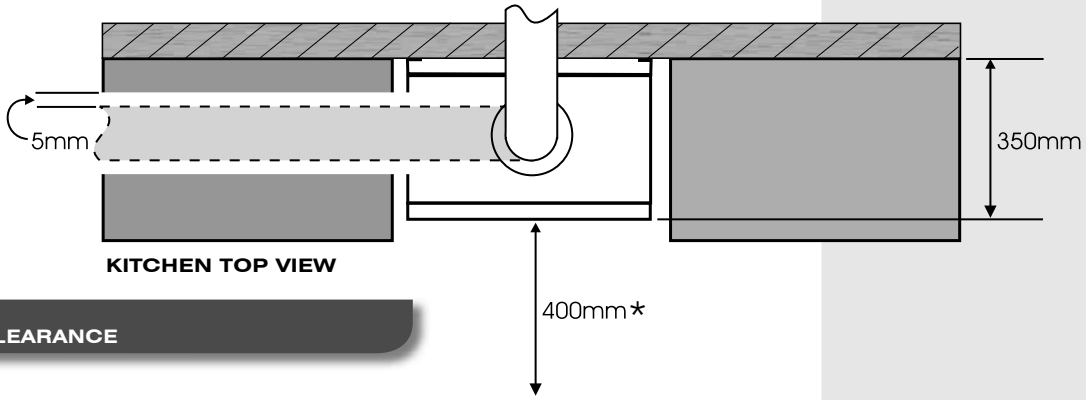

KITCHEN TOP VIEW

FIGURE 2
MINIMUM CLEARANCE

8. HEATING SYSTEM

IT IS A STATUTORY REQUIREMENT THAT ALL GAS APPLIANCES ARE INSTALLED BY COMPETENT PERSONS, (i.e. CORGI REGISTERED INSTALLERS. CORGI MEMBERSHIP ENQUIRIES - 0800 915 0485) IN ACCORDANCE WITH THE GAS SAFETY (INSTALLATION AND USE) REGULATIONS (CURRENT EDITION). FAILURE TO COMPLY WITH THESE REGULATIONS MAY LEAD TO PROSECUTION.

8.1 This appliance incorporates all the necessary components to allow it to be connected to a sealed central heating system. Figure 3 shows a typical system incorporating radiators, an automatic by-pass valve and a drain facility that must be provided at the lowest point in the system to allow complete drain down. The domestic cold inlet and hot outlet are also shown and Figure 4 shows the water flow through the boiler. The installation should be designed to operate with a flow temperature of up to 90˚C.

8.2 EXPANSION VESSEL

The integral expansion vessel is pre-charged to a pressure of between 0.5 and 1.0 bar. This should be checked before the water system is filled. Details below show the water system volume that is acceptable for this vessel. If the system water volume is larger then an additional vessel must be fitted to the system. BS 5449 and BS 6798 give further details regarding expansion vessel sizing and sealed systems. See Table 6.

EXPANSION VESSEL REQUIREMENTS					
Vessel charge and initial system pressure	bar	0.5	0.75	1.0	1.5
Total water content of system using 8 Litres (1.45 gals) capacity expansion vessel supplied with appliance	L	95	84	73	50
For system having a larger capacity multiply the total system capacity in litres by the factor to obtain the total minimum expansion vessel capacity required litres		0.0833	0.09	0.109	0.156

TABLE 6
Expansion Vessel Requirement

8.3 PRESSURE GAUGE

The appliance has two components that monitor pressure. Firstly there is a mechanical pressure gauge on the plumbing jig, this allows the heating system to be pre-plumbed and filled with a visual check on the pressure. The second is an electronic device used by the microprocessor control to monitor the system pressure and block the heat input, should there be a lack of pressure.

8.4 LCD DISPLAY

When the electrical supply is connected, the liquid crystal display indicates the system water pressure. This pressure is also monitored by the microprocessor controls.

8.5 PRESSURE RELIEF VALVE

The pressure relief valve protects the system from over pressurisation. It is set to be fully open at 3 bar, however it will start to open at approximately 2.7 bar. It should not be used to flush the system. Using no less than 15 mm diameter copper pipe, the discharge pipe must be extended to a safe place outside the building. The discharge position must be visible, not onto a public access area or above any window or entrance. The pipe must have a continuous fall and discharge to a safe place. It is possible that boiling water and/or steam could be discharged if the safety valve operates.

8.6 FILLING LOOP

The plumbing jig incorporates a filling loop that temporarily connects the DHW supply to the CH system. This is used to fill the CH system on installation and whenever the water pressure has been removed for system modifications, etc. The filling loop complies with the water supply (water fittings) regulations 1999 Section G24.1 and G24.2. After filling the system the hose should be disconnected and stored in a safe place for future use. A blanking kit (part No: 1000-0020810) is available where it is necessary to remove the filling loop at one end only.

8.7 PIPEWORK SIZING

In order to keep the noise of the system to a minimum, the velocity of water should be kept below 1.5 m/s and it should be noted that the appliance is designed to operate with a temperature differential of 20˚C between flow and return. The maximum flow rates are 0.3 kg/s (HE30C) and 0.38 kg/s (HE37C) which, through a 22mm pipe, gives velocities of 1.00 m/s (HE30C) and 1.25 m/s (HE37C). Therefore, the recommended minimum pipe size for the main carcass is 22mm.

8.8 WATER TREATMENT

It is important that the system is flushed thoroughly before the appliance is left to operate (as recommended in BS 7593) in order to maintain an efficiently operating heating system. For replacement installations, the system MUST be flushed with the old boiler in situ, in order to prevent the Reno becoming a trap for system debris. Once the system has been flushed, an inhibitor (suitable for stainless steel heat exchangers) should be added. Appropriate inhibitors are available, for example Sentinel, Fernox and Salamader.

Failure to carry out the above procedure will invalidate the guarantee!

NOTE: Water supplied from a water softener MUST NOT be used unless a specially formulated corrosion inhibitor is added (see BS 6798)

8.9 CONTROLS

As a minimum, a time clock and room thermostat must be installed to control the appliance. Thermostatic radiator valves may be fitted to the system, however they must not be fitted in the room where the room thermostat is fitted. There must be at least one radiator installed with lock shield valves that should not be closed. Further guidance can be obtained from the Domestic Heating and Hot Water Guide to the building regulations and GPG 302.

NOTE: A differential pressure bypass valve MUST be installed to maintain a minimum flow rate of 18 l/min (RenoXtra 30C) or 23 l/min (RenoXtra 37C) (20˚ differential at maximum heat input).

8.10 DOMESTIC HOT WATER SYSTEM REQUIREMENTS

8.10.1 Domestic hot water circuits and their components, must be in accordance with the relevant standards and water supply regulations. Further guidance/recommendations can be found in building regulations G17 to 24 and R17 to 24.

8.10.2 The maximum domestic cold water supply pressure allowable for this appliance is 5 bar. If the supply pressure exceeds this, a pressure-reducing valve must be installed in the supply to the appliance.

8.10.3 If the water to the property is “hard”, more than 200ppm of salts, then a scale inhibitor should be fitted. Such products are available from Salamander.

NOTE: The system must not be filled with ‘softened’ water. The cold water filling position should be before any softening product.

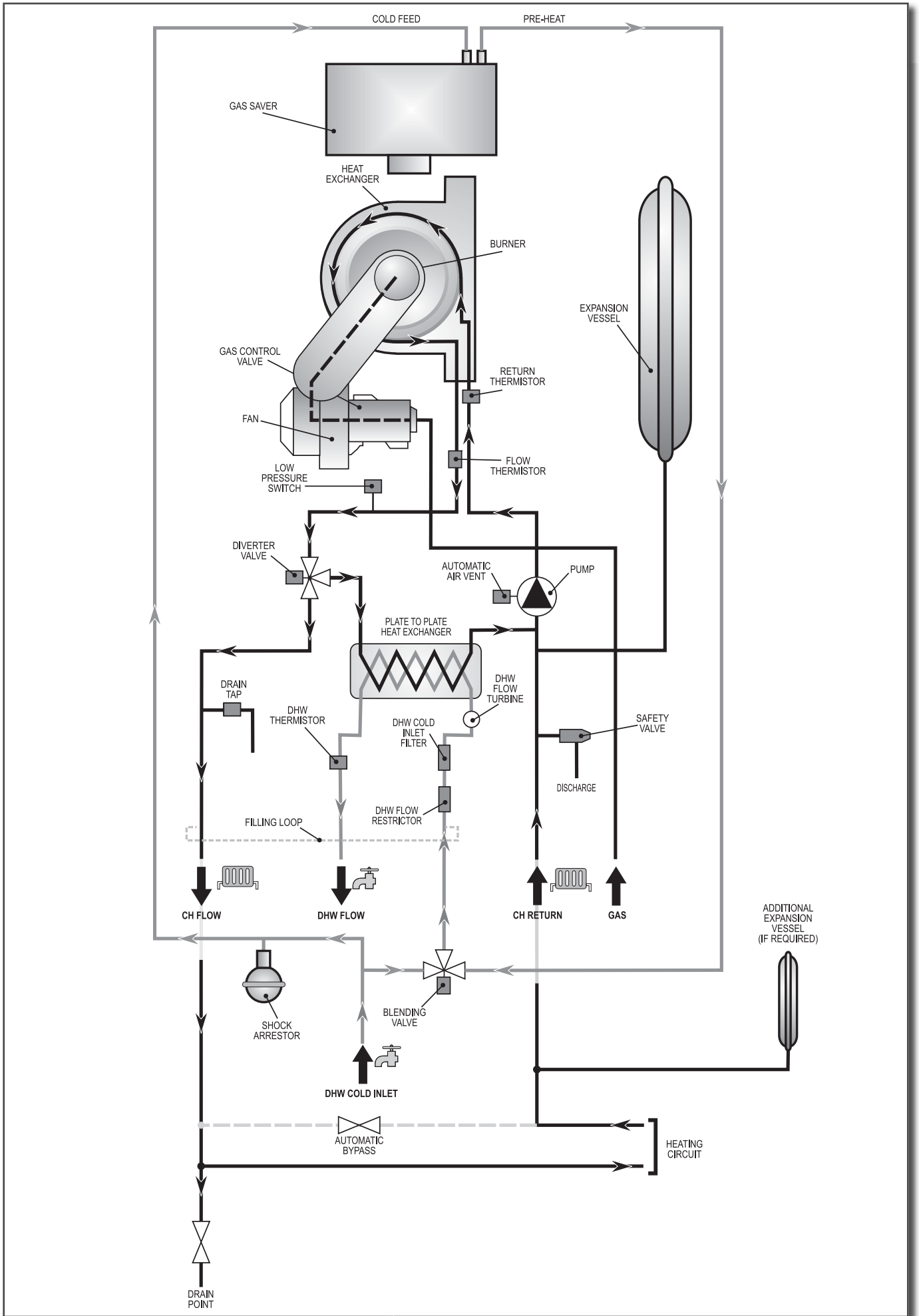

FIGURE 3
WATERFLOW SCHEMATIC DIAGRAM

9. FITTING

9.1 TEMPLATE

9.1.1 Using a plumb line (to make sure the unit is square) fix the template to the wall. Mark the positions of the flue and the 8 fixing points.

9.1.2 Using a 105 mm core drill make the hole through the wall. Installations that are made from within the building only will require a 125 mm diameter hole in order to fit the flue system.

9.1.3 Using a 7mm bit, drill a total of 4 fixing holes at the top of the wall plate and a minimum of 2 at the bottom. Insert the Rawlplugs. Remove the template.

9.2 WALL PLATE ADAPTOR

The wall plate adaptor comes already fitted with the 2 downpipes attached by clips on the back. Figure 4a

9.2.1 Fix the wall plate to the wall ensuring it is level, with the screws provided.

9.2.2 Fit the blending valve between the DHW cold inlet and lower end of pre-heat pipe connect the the outlet blending valve to the cold water inlet connection on the RenoXtra. Fit the shock arrestor to the lower end of the cold feed connection. See Figure 4b.

9.3 FITTING THE APPLIANCE

Caution: this appliance exceeds the recommended weight for a one-man lift as detailed in the Manual Handling Operations, 1992 Regulations.

It should be noted that this appliance could contain sharp edges and care MUST be taken when handling.

9.3.1 Lift the appliance onto the wall plate adaptor and locate the unit on the two lugs on the wall plate. Figure 4c

9.3.2 The boiler then drops into place and needs no further fixing.

9.3.3 Ensure the gasket is in place and sit the gas saver unit on top of the appliance. The spigot on the bottom of the gas saver should slot easily into the heat exchanger on the appliance. Remove boiler inner panel to check engaged. These will make a seal once aligned. Line up the screw holes on the front and top rear and fix together using the screws and nuts provided. Figure 4d & 4e

9.3.4 Connect the blending valve outlet to DHW inlet on the boiler. Figure 4b

9.3.5 Connect the 2 pipes in the wall plate to the gas saver using 15mm compression elbows. Figure 4g.

9.3.6 Prime gas saver unit by pouring 6 litres of water into the top of the gas saver before connecting the flue.

9.3.7 Fit side panels, front door and MMI panel.

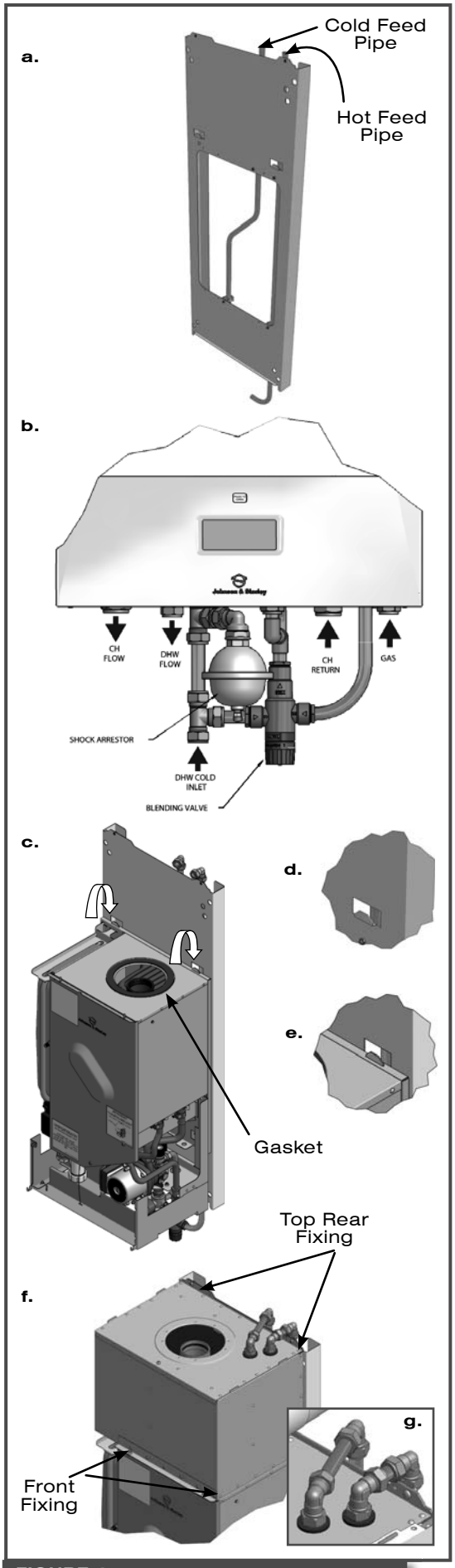

FIGURE 4
FITTING THE WALL PLATE & APPLIANCE

10. FLUE INSTRUCTIONS

FOR A DETAILED INFORMATION MANUAL ABOUT THE FLUE SYSTEMS AVAILABLE PLEASE REFER TO OUR RENO, CONCENTRIC & TWIN FLUE INSTALLATION INSTRUCTION PUBLICATION No. ZZ1191.

10.1 The Reno Combi Boiler is certified as a heating boiler with corresponding flue systems according to EU Directive 90/396/EEC on gas-fired devices. These installation instructions are covered by this certification and are referred to in the design approval test certificate.

10.2 The installation of the boiler and flue system must be in accordance with the Gas Safety (Installation and Use) Regulations 1998 and the Building Regulations. If no specific instructions are given, reference should be made to the relevant codes of practice.

THESE RELEVANT STANDARDS SHOULD BE FOLLOWED

BS 5440:1 Flues and ventilation for gas appliances of rated heating input not exceeding 70kW (net) : Flues

BS 5440:2 Flues and ventilation for gas appliances of rated heating input not exceeding 70kW (net) : Air Supply

Ensure all legislation, regulations and directives mentioned are observed.

10.3 Two types of flue systems are available for the Reno Boiler Range. The standard concentric flue system 60/100 (100mm diameter) and the concentric twin flue system 80mm which allows for longer flue duct lengths to be achieved.

10.4 The air/flue duct operates at very low temperatures therefore no clearance is necessary between the air duct and the adjacent services.

10.5 Ensure while installation work is being carried out that no debris such as swarf, filings or fragments of mortar are allowed to remain in the air/flue duct.

10.6 TYPE OF FLUE SYSTEMS

10.6.1 The standard concentric flue system 60/100 (100mm diameter)

10.6.2 The air/flue duct operates at very low temperatures therefore no clearance is necessary between the air duct and the adjacent services.

10.7 FLUE TERMINAL POSITIONS

10.7.1 The following information provides the general requirements for siting flue terminals. As part of the recommendation given in BS 1550 Part 1. For IE recommendations, see the current issue of I.S. 813 “Domestic Gas Installations.” Also publication a “Guide for Gas Installations in Timber Framed Housing DM2” or consult your local gas region, MUST be consulted when installing the appliance into a timber-framed building.

NOTE: Due to the nature of the boiler, water vapour will discharge from the flue. This should be taken into account when siting the flue

10.7.2 Both the horizontal and vertical terminals must be positioned on the outside of the building and the free passage of air must be available at all times. It is not recommended to position the terminal close to projections especially under a balcony or near to a drainpipe.

10.7.3 Ensure that combustion products cannot enter the building where the heater is installed or near to any other building where doors or windows may be open.

10.7.4 Recommended terminal positions for both horizontal and vertical flues are shown and flue components and installation options are also detailed.

10.7.5 Where the lowest part of the flue terminal is located less than 2 metres above the ground, a balcony or above a flat roof across which there is access, the terminal MUST be fitted with a guard (Part No: 1000-0019710) which is available from Johnson & Starley. The distance between the guard and the nearest part of the terminal must not be less than 50 mm.

10.7.6 The Flue MUST NOT be installed under a car port.

10.8 PLUME TERMINAL OUTLETS

10.8.1 A flue duct outlet of an appliance should be at least 600mm from the boundary line when facing it and at least 300mm from the boundary line when running parallel to it. (see Fig 6)

NOTE: When the flow of products is at an angle to the boundary, the 600mm dimension may be measured in the direction of the flow, as long as the terminal is not less than 300mm from the boundary.

10.8.2 It is recommended the terminals are not sited within 2 m of an opening in an adjacent building or within 2m of the boundary facing the terminal if the plume is likely to cause a nuisance to a neighbour, e.g discharging over a walkway or patio.

FIGURE 5
TERMINAL POSITIONS

TABLE 7	TERMINAL POSITION	MINIMUM DISTANCE
A	Directly below an opening, air brick, opening window etc	300mm
B	Above an opening, air brick, opening window, etc.	300mm
C	Horizontally to an opening, air brick, opening window etc.	300mm
D	Below gutters, soil pipes or drain pipes.	75mm
E	Below eaves.	200mm
F	Below balconies.	200mm
G	From a vertical drain pipe or soil pipe.	150mm
H	From an internal or external corner. Greater than 450mm protrusion.	300mm
I	Above ground, roof or balcony level.	300mm
J	From a surface facing the terminal.	600mm
K	From a terminal facing the terminal.	1,200mm
M	Vertically from a terminal on the same wall.	1,500mm
N	Horizontally from a terminal on the same wall.	300mm
Q	Above intersection with roof.	530mm
P	From a vertical structure on the roof	300mm
R	From the terminal to the boundary	300mm

FIGURE 6
PLUME TERMINAL OUTLET DIMENSIONS

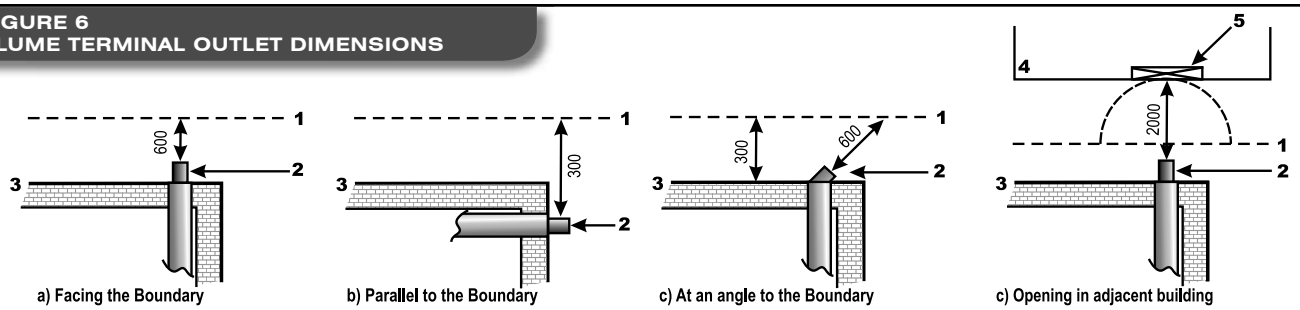

HORIZONTAL FLUES

HORIZONTAL REAR FLUE

Standard flue kit comprising of:
Turret
Horizontal Terminal

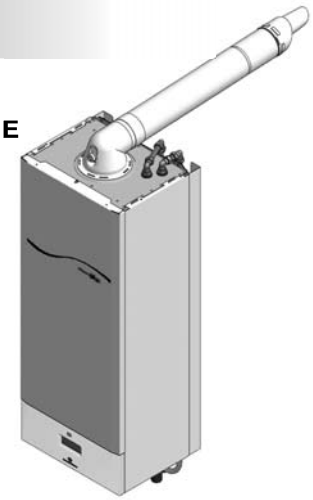

HORIZONTAL SIDE FLUE

Can be fitted to the left or the right.
Standard Flue Kit
Turret
Horizontal Terminal

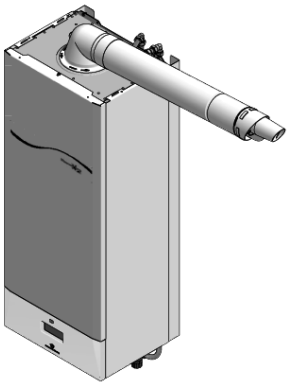

OFFSET EXTENDED HORIZONTAL REAR FLUE

Can be fitted to the left or the right.
Standard Flue Kit +
90˚ Elbow
Required Extension Length

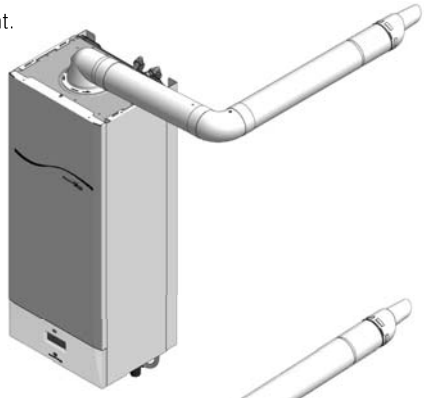

EXTENDED HORIZONTAL REAR FLUE

Can be fitted to the left or the right.
Vertical Appliance Adaptor
Horizontal Terminal
90˚ Elbow
Required Extension Length

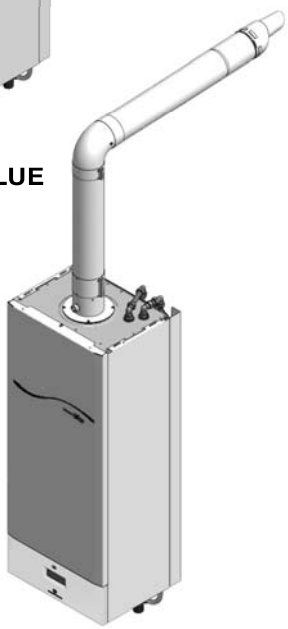

VERTICAL FLUE

Vertical Appliance Adaptor
Required Extension Lengths
Vertical Terminal

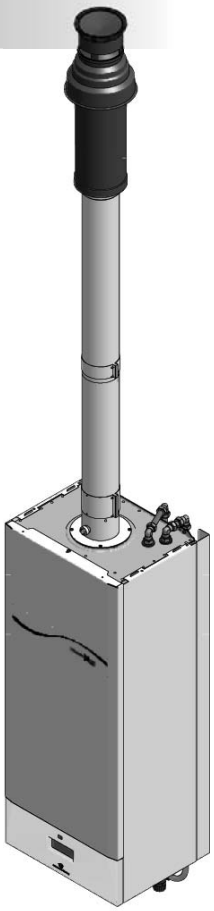

OFFSET VERTICAL FLUE

Can be fitted to the left or the right.
Turret
Vertical Terminal
90˚ Elbow
Required Extension Lengths

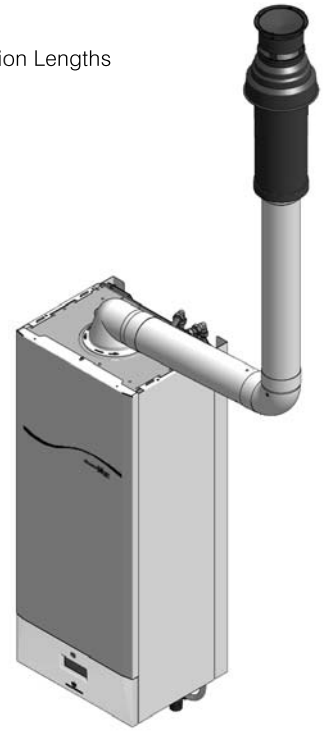

ITEM	DESCRIPTION	QTY	PARTS INCLUDED	APPLICATION	PART No.	PASCAL	
						30C	37C
1	**STANDARD FLUE KIT WHITE**	1	Turret	Horizontal	1000-0020070	45	60
		1	Appliance Seal				
		1	60/80 Adaptor				
		1	Inside Wall Cover Plate				
		1	Outside Wall Cover Plate				
		1	100mm Diameter Clamp				
		1	800mm Horizontal Terminal				
1a	**TURRET WHITE**	1	Turret	Horizontal	1000-0020020	40	45
1b	**HORIZONTAL TERMINAL WHITE**	1	800mm Horizontal Terminal	Horizontal	1000-0019830	5	15
2	**VERTICAL APPLIANCE ADAPTOR WHITE**	1	Adaptor	Vertical	1000-00018990	0	0
3	**45˚ ELBOW WHITE**	1	Elbow	Horizontal + Vertical	1000-00018980	5	12.5
4*	**90˚ ELBOW WHITE**	1	Elbow	Horizontal + Vertical	1000-00018980	10	75
5	**250mm STRAIGHT EXTENSION WHITE**	1	250mm Straight Extension	Horizontal + Vertical	1000-0018960	1.25	4
		1	100mm Diameter Clamp				
		2	Screws				
6	**500mm STRAIGHT EXTENSION WHITE**	1	500mm Straight Extension	Horizontal + Vertical	1000-0018950	2.5	7.5
		1	100mm Diameter Clamp				
		2	Screws				
7	**1000mm STRAIGHT EXTENSION WHITE**	1	1000mm Straight Extension	Horizontal + Vertical	1000-0018940	5	15
		1	100mm Diameter Clamp				
		2	Screws				
8	**FLAT ROOF WEATHER COLLAR**	1	Aluminium Circular Flat Roof Seal	Vertical	1000-0020060	n/a	n/a
9	**PITCHED ROOF COLLAR BLACK**	1	Plastic & Lead Pitched Roof Seal	Vertical	1000-0020030	n/a	n/a
10	**RIDGE TERMINAL**	1	Condensing Concentric Ridge Terminal		1000-0021030	5	10
11	**WALL FIXING BRACKET 100mm**	1	Clamp for 100mm tube	Horizontal + Vertical	1000-0020050	n/a	n/a
12	**1140mm VERTICAL TERMINAL**	1	Vertical Terminal Assembly	Vertical	1000-00018930	5	10
		1	Support Bracket				
PLUME MANAGEMENT SYSTEM							
17	**PLUME MANAGEMENT KIT (BLACK) 60mm**	1		Horizontal + Vertical	1000-00200730	21	53
18	**1000mm EXTENSION FLUE 60mm**	1		Horizontal + Vertical	1000-0020740	3	8
19	**90˚ ELBOW BLACK 60mm**	1		Horizontal + Vertical	1000-0020680	6	15
20	**45˚ ELBOW (BLACK) 60mm**	2		Horizontal + Vertical	1000-0020670	3	8
21	**WALL FIXING BRACKET 60mm**	1		Horizontal + Vertical	100-0020770	n/a	n/a

TABLE 7
60/100 FLUE COMPONENTS

10.9 FLUE REQUIREMENTS & GENERAL INFORMATION

10.9.1 Horizontal and vertical concentric flues (60/100mm diameter) with balanced terminals may be installed on all the Reno appliance's.

10.9.2 If an extended horizontal flue is being used (any flue length longer than the standard kit) it must have a continuous fall back towards the appliance of 3° (52mm) per meter. This ensures that condensate runs back into the appliance from the flue system for safe discharge via the condensate waste pipe. Reference should be made to Table 7 for relevant part numbers.

10.9.3 The maximum length of flue permissible is calculated by using the component pressure drop (Examples are given in Figure 8 which include the maximum lengths at 95% of input.)

10.9.4 The minimum vertical flue length is 0.7m from the top of the appliance case to the top of the terminal.

10.9.5 Longer flues may be fitted, however the input of the appliance will be reduced accordingly.

10.9.6 Elbows may be fitted within the flue system with a corresponding reduction in overall flue length based on the component pressure drop.

10.9.7 Reference should be made to Tables 8.

TABLE 8
FLUE PRESSURE DROPS

Flue Pressure Drops for the RenoXtra 30C ——— & RenoXtra 37C - - - - -

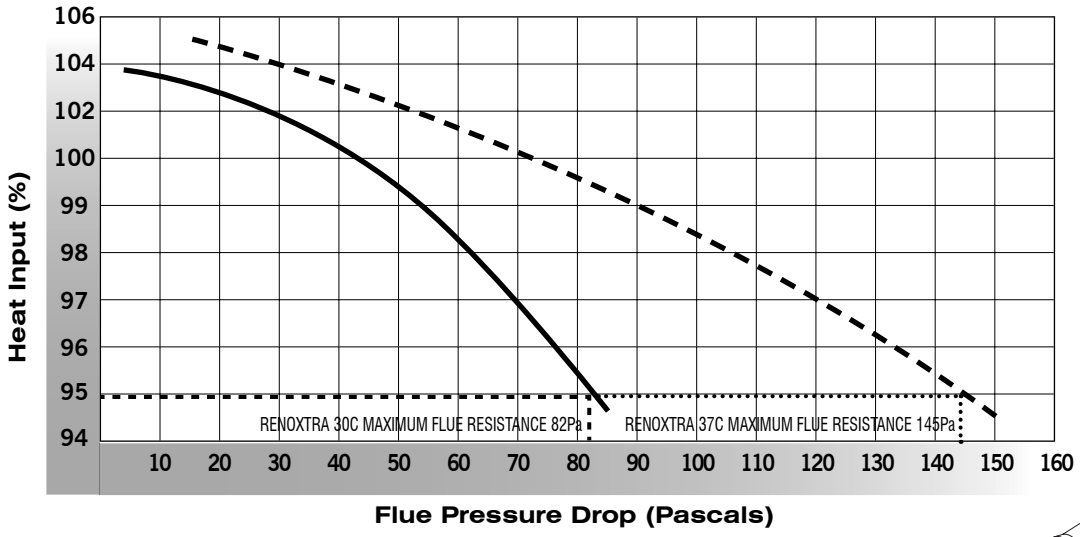

FLUE PRESSURE DROP EXAMPLE

Turret + Horizontal Terminal	=	**45 Pa**
500mm Extension	=	**2.5 Pa**
90 Elbow	=	**10 Pa**
100m Extension	=	**5 Pa**
90 Elbow	=	**10 Pa**
TOTAL	=	**72.5 Pa**

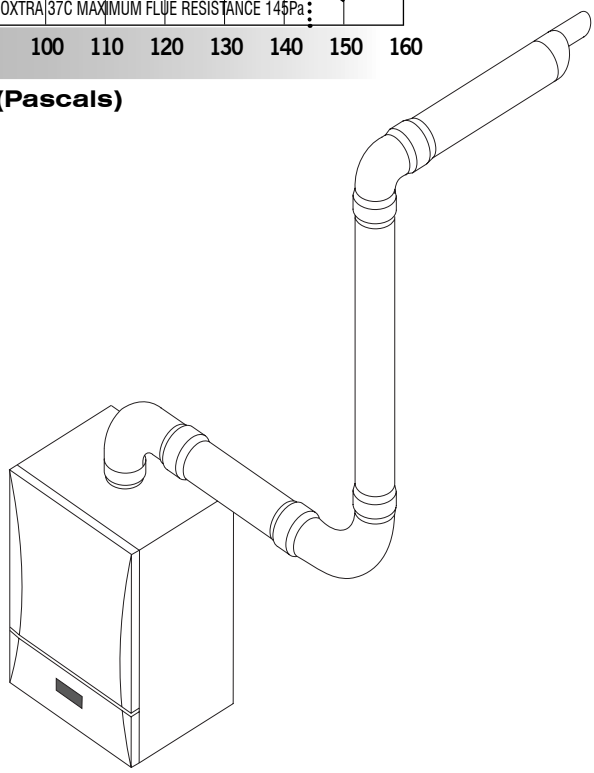

10.10 INSTALLATION INSTRUCTION FOR ROOF OUTLETS

FLAT ROOF

PITCHED ROOF

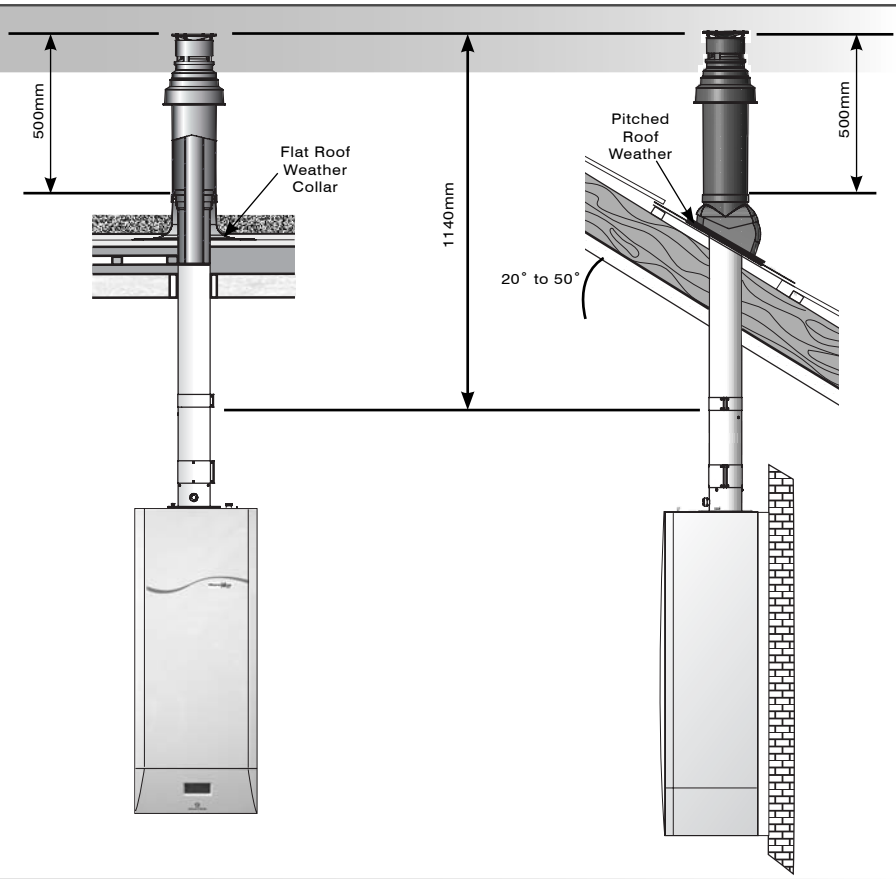

RIDGE TERMINAL

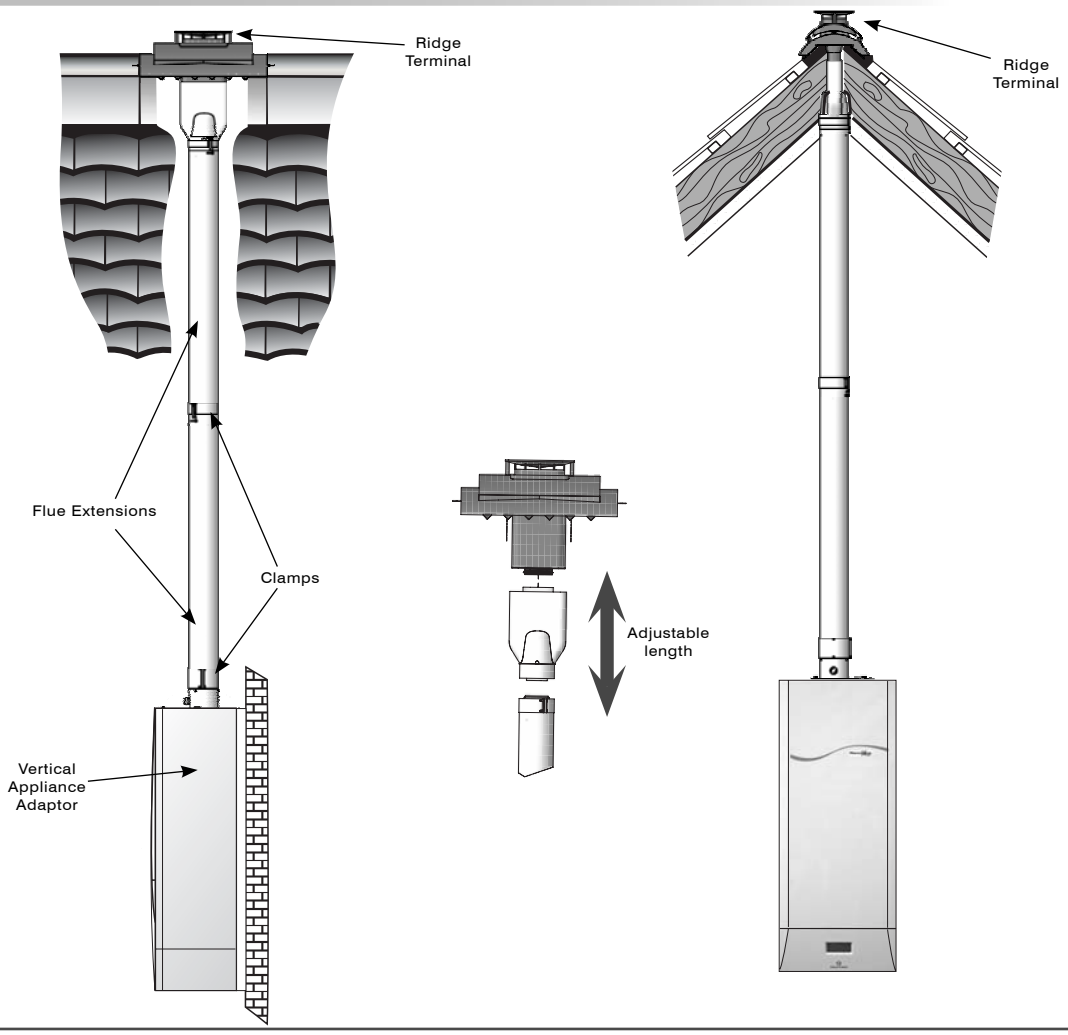

10.12 INSTALLATION OF THE STANDARD FLUE SYSTEMS

The standard flue kit comprises of:

ITEM	DESCRIPTION	QTY
1	Turret	1
2	Appliance Seal	1
3	60/80 Adaptor	1
4	EPDM Outside Wall Cover Plate	1
5	Inside wall cover Plate	1
6	100mm Diameter Clamp	1
7	800mm Horizontal Terminal	1

IMPORTANT NOTE:
Before carrying out this procedure ensure seal has not been dislodged from top of heat exchanger.

With the appliance comes a wall template.
(Label Ref: 1000-2217950-3)

HORIZONTAL REAR FLUE

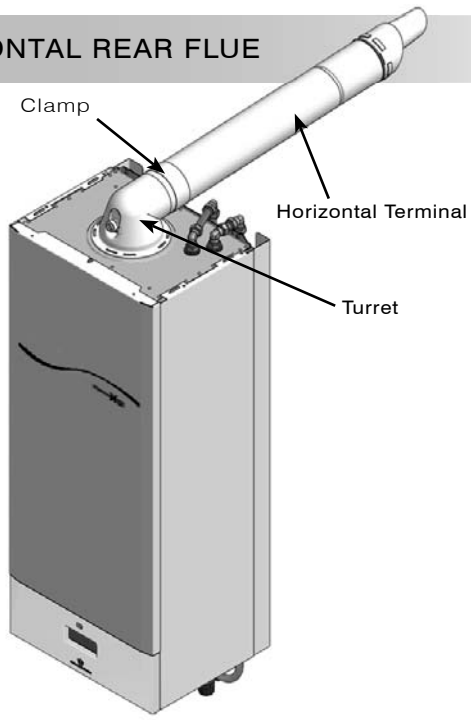

HORIZONTAL SIDE FLUE

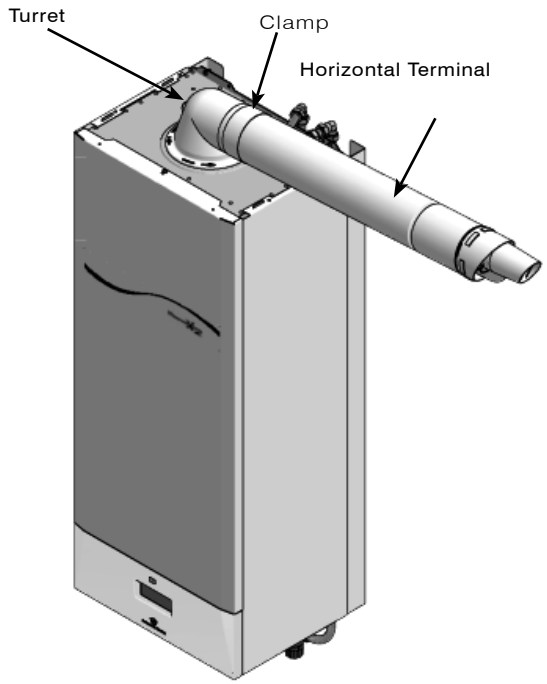

1. INSTALLATION INSTRUCTIONS

1.1 Using the template supplied with the boiler, determine the position of the flue.

1.2 If access is available from outside drill a 105mm diameter hole.

If no access is available refer to section 2.

1.3 Mount the jig and the boiler on the wall as detailed in the boiler installation instructions.

1.4 Fit the appliance seal to the underside of the turret and fix the turret to the top of the boiler using the 4 screws supplied, ensuring that the heat exchanger flue seal and 60/80 adaptor is in place.

1.5 Take a measurement from the outside of the wall to the edge of the turret dimension "X" Fig. 1.

1.6 Mark this dimension onto the horizontal terminal as shown in Fig. 2.

1.7 Cut the flue to the desired length making sure the ends are square and free from burrs.

NOTE: *To ease the assembly of the flue components, apply suitable silicone lubricant to the male plastic end. (Any other type of lubricant may corrode the gasket.)*

1.8 Place flue clamp over turret rim.

1.9 From the outside of the building, push the terminal through the wall and locate the male plastic end of the terminal into the female end of the turret.

1.10 Place clamp equally over the turret and terminal ends and tighten the 2 screws.

1.11 Fit the rubber-finishing ring over the outside of the flue, pushing it flush to the wall. The rib on the inside of the ring will locate in-between the locating pips on the end of the terminal.

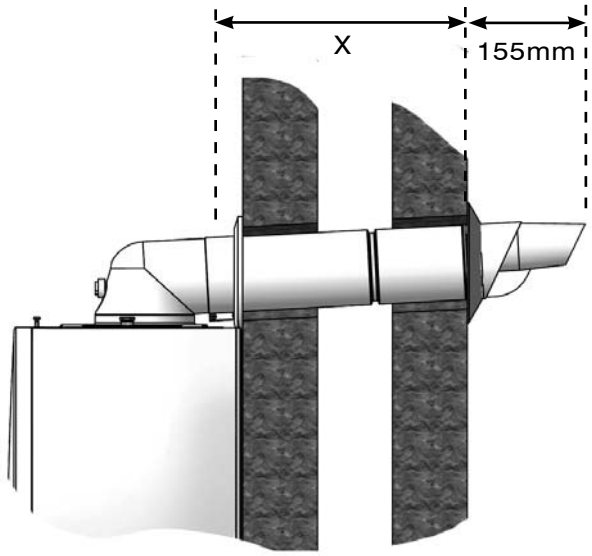

Fig. 1

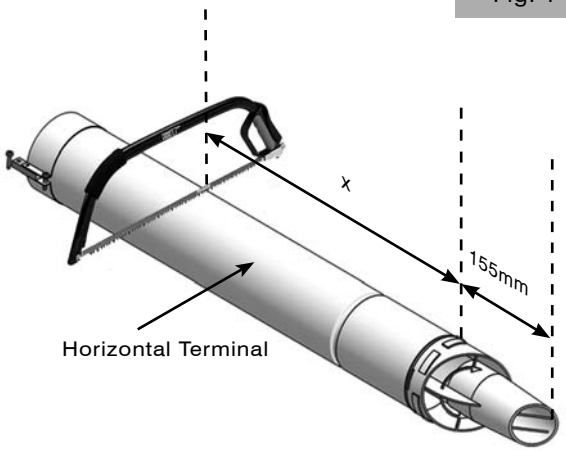

Fig. 2

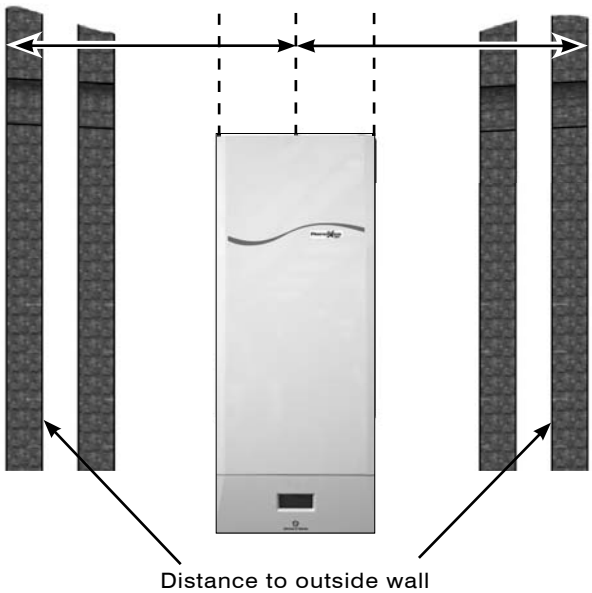

TURRET FLUE LENGTH =
Centre of boiler to outside wall + XXXmm

Fig. 3

2. NO OUTSIDE ACCESS

2.1 If no access is available from outside the building drill a 125mm diameter hole.

2.2 Mount the jig and the boiler on the wall as detailed in the boiler installation manual.

2.3. a. For a rear flue measure the wall thickness and add;

40mm for a standard rear flue

90mm for a rear flue if the standoff bracket is used.

b. For a side flue measure the distance from the outside wall to the side of the boiler and add;

Length shown in Fig. 3.

This dimension is known as dimension “X”.

2.4 Mark this dimension on to the turret as in Fig. 2.

2.5 Cut the flue to the desired length making sure the ends are square and free from burrs.

NOTE: *To ease the assembly of the flue components, apply suitable silicone lubricant to the male plastic end. (Any other type of lubricant may corrode the gasket.)*

2.6 Fit the rubber-finishing ring over the outside of the flue. The rib on the inside of the ring will locate in-between the locating pips on the end of the terminal.

2.7 Push the terminal through the hole in the wall.

2.8 Fit the appliance seal to the underside of the turret and fix the turret to the top of the boiler using the 4 screws supplied, ensuring that the heat exchanger flue seal and 80/60 reducer is in place.

2.9 Place flue clamp over turret rim

2.10 Pull back the terminal through the wall locating the male plastic end of the terminal into the female end of the turret.

2.11 Place the clamp equally over the turret and terminal and tighten the 2 screws.

11. CONDENSATE DRAIN

11.1 The condensate drain utilizes plastic 21.5mm push fit or adhesive overflow pipes and fittings. It should be piped to drain, preferably within the building, maintaining a 44mm in 1m fall away from the appliance. If the drain is routed to outside it should be to a drain or soak away. Protection from freezing in cold weather conditions is also advisable.

NOTE: * External runs exceeding 3 metres the discharge pipe should be increased to 32mm diameter for complete peace of mind.

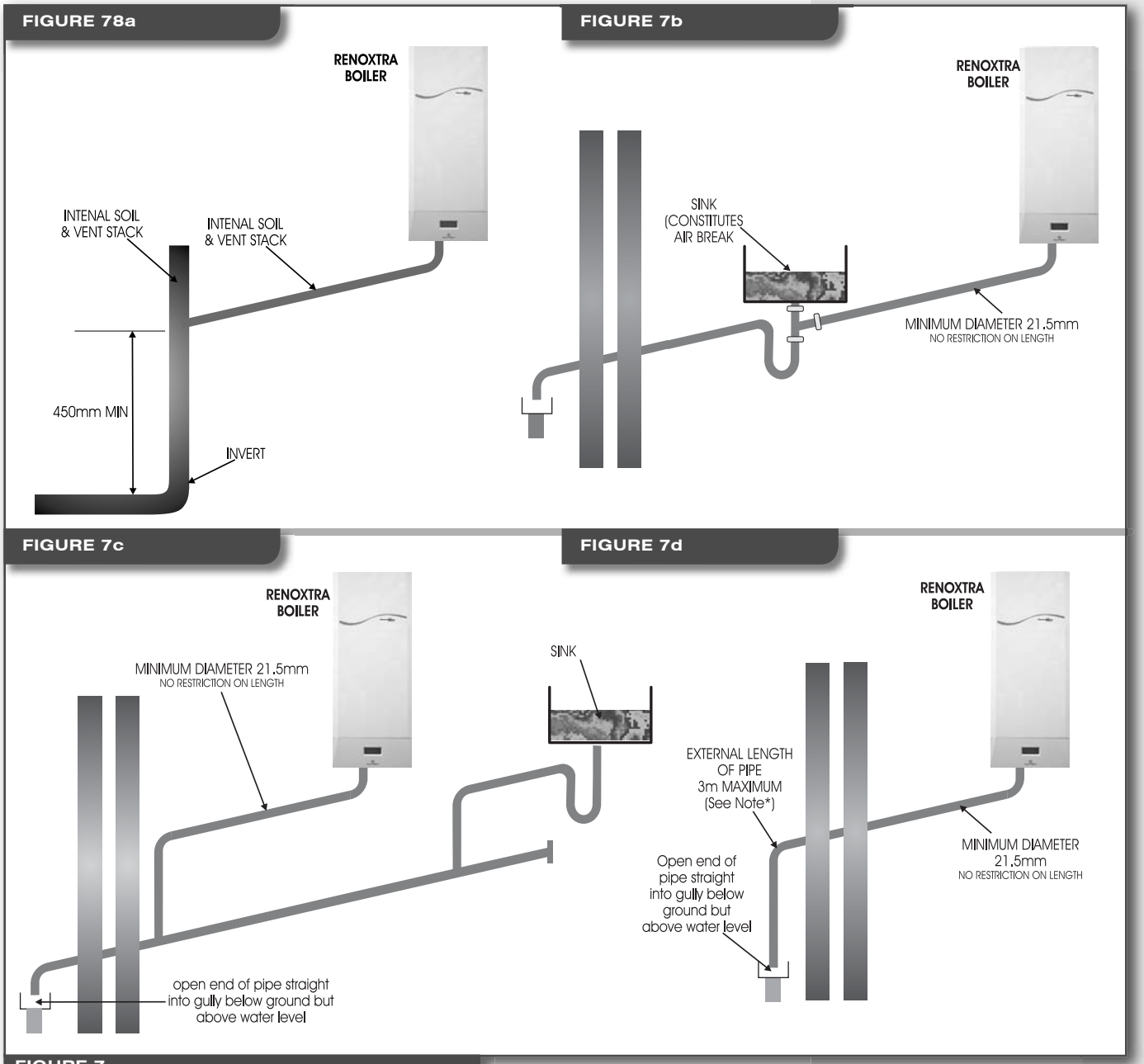

FIGURE 7
TYPICAL CONDENSATE DRAIN ARRANGEMENTS

NB the boiler has a built in condense trap and it MUST be noted that fitting an additional trap to the configurations shown above, may have an adverse effect on the evacuation of condensate from the boiler.

12. ELECTRICAL

12.1 Electrical Connections

12.1.1 External wiring must be correctly earthed, polarised and in accordance with BS 7671 (current edition).

12.1.2 All system components must be an approved type and all electrical components should have been tested and meet the requirements of BEAB or equivalent. All the electrical connections to the heating

system must be through a common double pole isolation switched spur that has a 3mm separation on each pole and has a 3A rated fuse. It should be used for the heating system only and no other household components. A fused three pin plug and shuttered outlet may also be used provided they both comply with BS 1363.

Important: This appliance must be earthed and it must be wired in accordance with these instructions. In addition, it must have a permanent electrical supply that is not interrupted by a timing device or thermostat.

12.1.3 Fit the electrical supply cable as shown using the connection plug provided. The cable must be at least 0.75 mm^2, PVC insulated to BS 6500.

12.1.4 As a minimum, a room thermostat MUST be fitted and therefore the link between L2 & L1 should be removed and the thermostat connected between these two connections. If the thermostat has a neutral connection, this should be used in order to enhance the temperature control. Programmable thermostats are wired in a similar way!

All cables entering/leaving the appliance MUST be restrained by use of the cable clamps!

12.2 Frost Protection

12.2.1 The microprocessor based controls within the appliance monitor the water temperature in order to protect from freezing. To ensure that this function is active the main switch on the appliance should be left on and the gas supply also left on. This does not protect remote areas of the heating system, which should be protected by other means (e.g. an independent frost thermostat that is linked back to the appliance).

12.2.2 If a frost 'stat is required to protect remote parts of the heating system, this should be fitted as accordingly.

12.3 Optional System Controls

12.2.1 Opentherm protocol controls are available for outside temperature compensation and room temperature sensing and can be used to improve the heating system control. They must be connected to the correct terminals as described in their own instructions. A room thermostat MUST NOT be used with these controls.

12.4 Fitting The Case & Control Module

12.4.1 Remove the case components from their packaging and fit the LH and RH case panels to the appliance. Each panel hooks over the two lugs at the top of the appliance and screws to the base with the screws provided.

12.4.2 Remove the controls door from the module panel and offer the controls module up to the side case panels. The two hinge pins drop into the two slots on the groupset support.

12.4.3 Fit the support strap (green cord) to the appliance to support the controls in the horizontal position.

12.4.4 Make the electrical harness connections to the rear of the module, ensuring that the harness connections are paired with their respective mates on the control module: X1; X2 etc.

12.4.5 Swing the controls up into their vertical position and secure to the side case with the two screws provided.

12.4.6 Refit the controls door, fit the front outer case and secure with the screw in the top of the boiler.

12.5 Electrical Testing

Carry out electrical checks:

- Earth continuity and short circuit of cables
- Polarity of the mains supply
- Insulation resistance to earth.

12.6 Electrical Supply Failure

12.6.1 In the event of electrical voltage supply failure, the appliance will stop operating but remain in a safe condition.

12.6.2 When the electrical supply is resumed, the appliance will start from its safe off condition and continue to operate in the normal manner under the control of the system components. Should the appliance fail to resume, press the RESET button to allow the safety control to be reset. Normal operation should then continue.

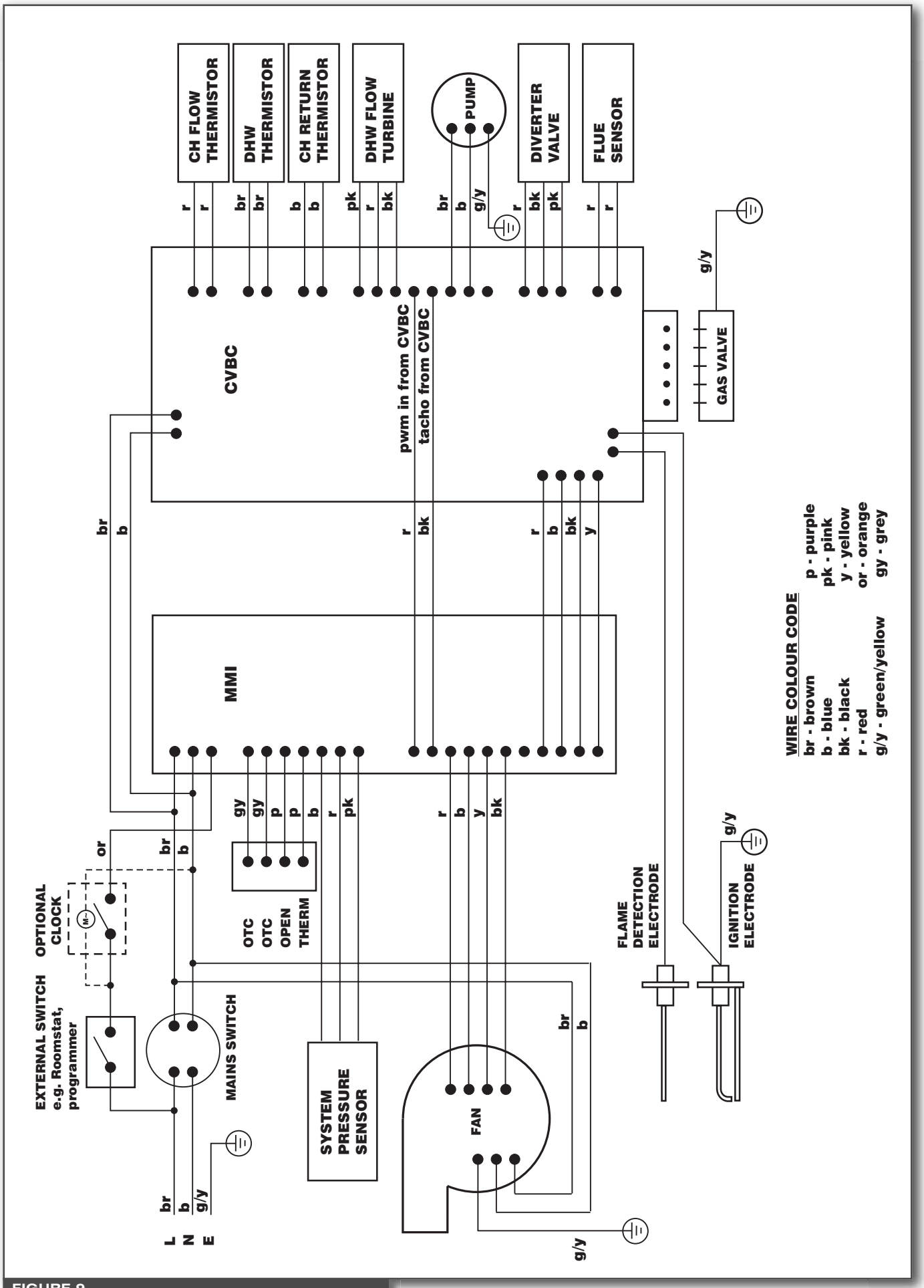

FIGURE 9
FUNCTIONAL FLOW CHART

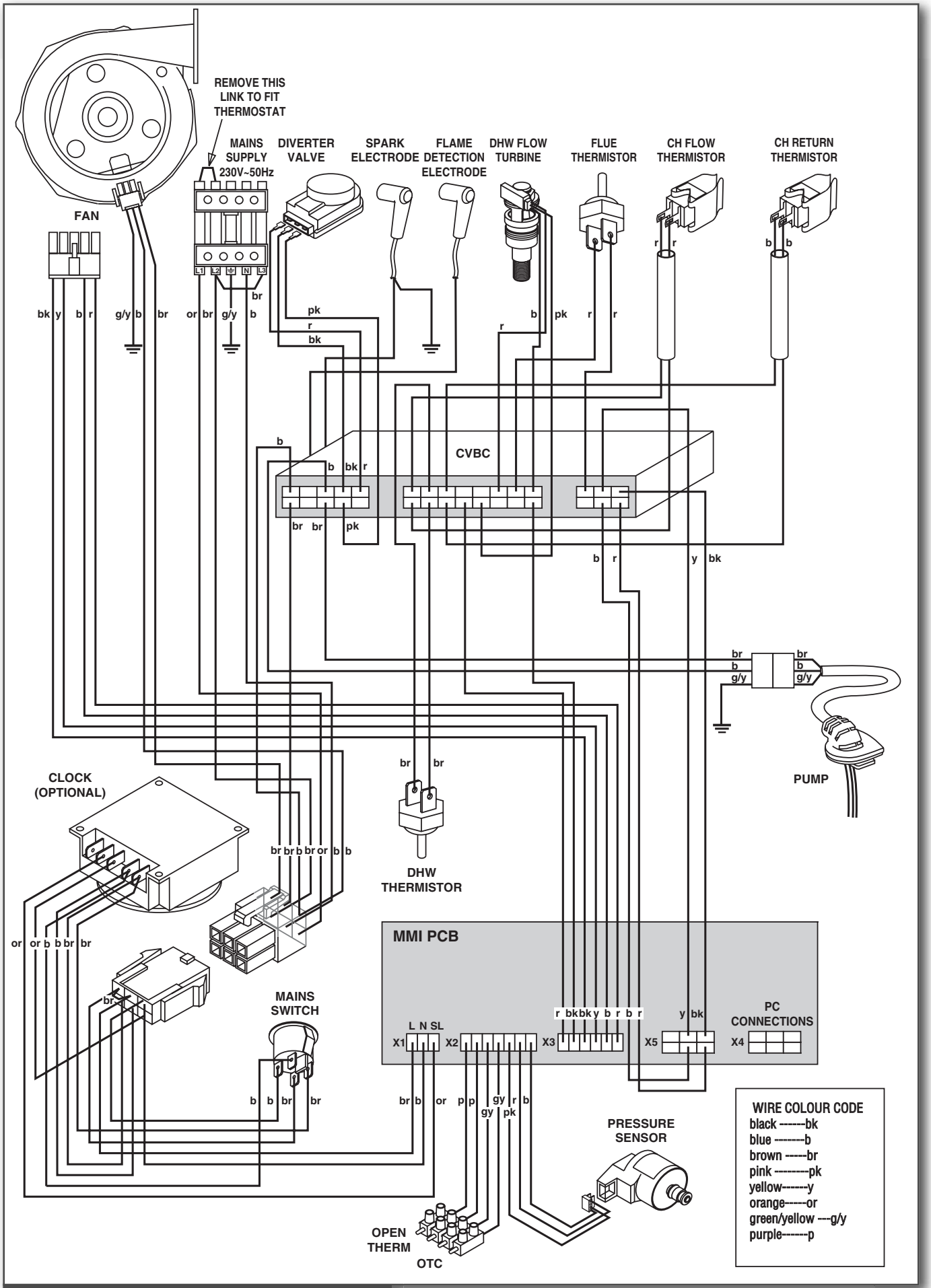

FIGURE 10
ILLUSTRATED WIRING DIAGRAM

15. COMMISSIONING

15.1 With all the pipe connections made, open the cold supply water valve and the CH flow and return valves at the base of the appliance. Open the manual vent at the top of the appliance and bleed, close the manual vent when all the air is removed and ensure that the autovent cap is open.

15.2 Ensure that all isolating valves are open and that the system is pressurised to the correct level.

15.3 Having tested for gas tightness, purge air from the gas supply and turn on the gas service cock. Prime gas saver unit by pouring 6 litres of water into the top of the gas saver before connecting the flue.

15.4 Ensure the domestic cold water system, all system radiators and the boiler have been bled.

15.5 Turn the CH and DHW controls to minimum, switch on the electricity supply to the appliance and turn ON the ON/OFF switch on the boiler control panel.

NOTE

The gas valve is factory preset and must not be adjusted. A replacement valve must only be supplied by Johnson & Starley Ltd.

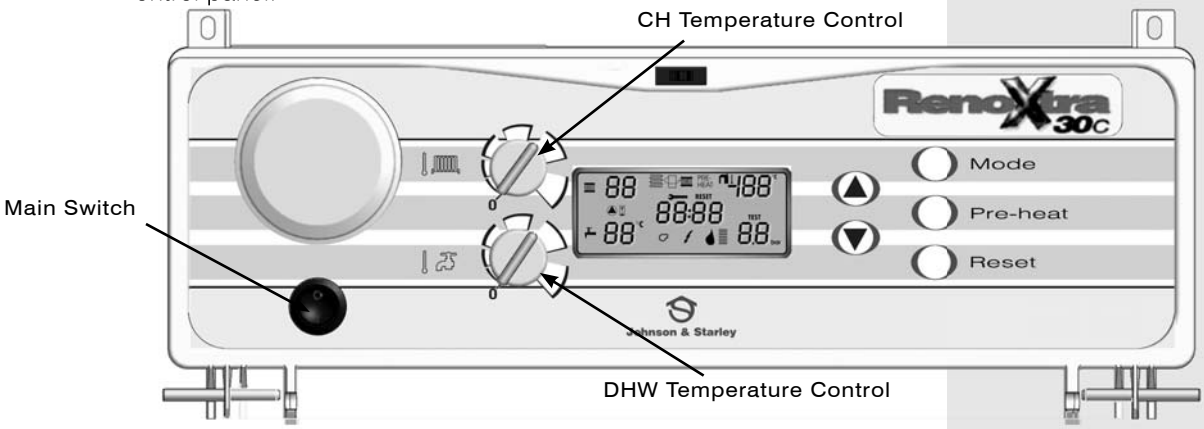

15.6 The LCD display will become active, whilst the microprocessor control completes a number of checks and sets the appliance to a standby position. When the boiler reaches its temp. set point, the anti-cycle feature introduces a 180 second delay between cycles, indicated by an hour glass symbol on the display. The display will indicate the system pressure in the lower RH corner of the LCD panel and a numerical display in the upper and lower LH side of the LCD panel.

15.7 Check that any external controls are calling for heat, switch the integral time clock (if fitted) to the ON position and turn the CH temperature knob clockwise. The set point temperature will be displayed on the LCD screen, set it to 60˚. The fan will start and the ignition sequence will take place. The display will indicate the burner is on and a stylised flame will be displayed when the flame is established.

15.8 If ignition does not take place during the first ignition attempt, there will be a further 2 attempts. If the burner has still not lit, a fault code will be displayed and this may be due to air being present in the gas supply. Pressing the reset button will initiate a second sequence of ignition attempts.

15.9 When the boiler lights, allow the appliance to operate at low temperature and vent all the air from the boiler and system. If necessary, re-pressurise the system to between 1.1 and 1.5 bar.

15.10 Turn OFF the CH by turning the C.H control to the OFF position. Turn the DHW temperature control to maximum. Open a DHW tap and allow the water to flow. The appliance will start an ignition sequence and light the burner. After ignition, the control will monitor the water temperature and try to maintain the DHW set point.

15.11 When the above checks have been completed, a combustion performance test (as detailed in the SERVICING section) can be carried out if required.

16. HANDING OVER

16.1 After commissioning, the installer should hand the appliance over to the occupier of the house by the following procedure:

16.2 Hand the User Instructions ZZ1312 to the occupier and explain their responsibilities in respect of current legislation and regulations, both national and local.

16.3 Explain and demonstrate how to light and shut down the appliance.

16.4 In order to gain the best possible fuel economy in relation to the heating and hot water requirements of the household, carefully explain the operation of the appliance and the use/adjustment of all the system controls.

16.5 Advise on the precautions required to prevent damage to the appliance; the system and the building in the event of the appliance being shut down in very cold weather.

16.6 Explain how to control the temperature of the radiators and domestic hot water by use of the controls on the appliance.

16.7 Explain how, in the event of a fault, the appliance will display a fault code, emphasising that if a fault is indicated they should note the fault code, turn off the appliance and contact a “competent person” which in normal circumstances would be a CORGI registered engineer.

16.8 Explain and demonstrate the function/operation of time/temperature controls and thermostatic radiator valves, emphasising the economic use of the appliance.

16.9 If a programmer has been fitted, hand the user instructions that were supplied with the programmer to the occupier.

16.10 Point out the water pressure gauge and explain what it indicates and that if the pressure falls over a period of time when the system is cold, a water leak should be suspected and that a “competent person” should be contacted.

16.11 Emphasise the importance of a regular service and that servicing of the appliance MUST only be carried out by a “competent person” which in normal circumstances would be a CORGI registered engineer.

16.12 As the installer you may wish to offer a service contract yourself, or alternatively you may wish to explain to the occupier that they can take advantage of an extended warranty scheme offered by Johnson & Starley Ltd.

Reminder: At the time of commissioning, complete all relevant sections of the Benchmark Checklist located on the inside back pages of this document prior to handing over the appliance to the occupier.

benchmark COLLECTIVE MARK
THE MARK OF QUALITY FOR THE INSTALLATION, COMMISSIONING AND SERVICING OF DOMESTIC HEATING AND HOT WATER SYSTEMS

17. SERVICING

17.1 SERVICING SCHEDULE

To ensure that the appliance gives continued operation that is both safe and efficient, it is necessary to carry out regular service checks and whilst the period between servicing will depend on the installation condition and the demands placed upon the appliance, it is recommended that the appliance be serviced annually.

NOTE: it is a statutory requirement that ALL work be carried out by a “competent person” which in normal circumstances would be a CORGI registered engineer.

17.2 SERVICING SEQUENCE

17.2.1 Light the boiler and carry out a pre-service check, noting any operational faults.

17.2.2 Check the gas consumption.

17.2.3 Put the appliance in test mode and connect a suitable flue gas analyser to the sampling point on the top of the boiler or into the flue terminal if access is possible (optional test).

17.2.4 For correct boiler operation, the ratio of CO to CO2 in the flue gas should not be greater than 0.008.

17.2.5 Check that the gas input is at least 90% of the nominal.

17.2.6 Clean the main burner.

17.2.7 Clean the heat exchanger.

17.2.8 Check the condition of the combustion chamber insulation. Any cracked or damaged pieces should be replaced.

17.2.9 Check the condensate trap for blockages. To remove the trap you must isolate the water. Unscrew the trap at the bottom to clear.

17.2.10 Check that the flue terminal is unobstructed and that the flue system is sealed correctly.

17.2.11 Check the DHW flow and if reduced, check the DHW filter for blockage. (Refer to section 20.13)

Note: In order to carry out either servicing or replacement of components the boiler front panel and sealing panel must be removed. (Refer to section 20.1.2)

WARNING. Always turn OFF the gas supply at the gas service cock and switch OFF and disconnect the electricity supply to the appliance before servicing.

17.2.12 After completing the servicing or exchange of components, always test for gas tightness and carry out functional checks as described above.

17.2.13 When work is complete, the sealing panel MUST be correctly refitted, ensuring that a good seal is made.

17.2.14 After servicing, complete the relevant Service Interval Record section of the Benchmark Checklist located on the inside back pages of this document.

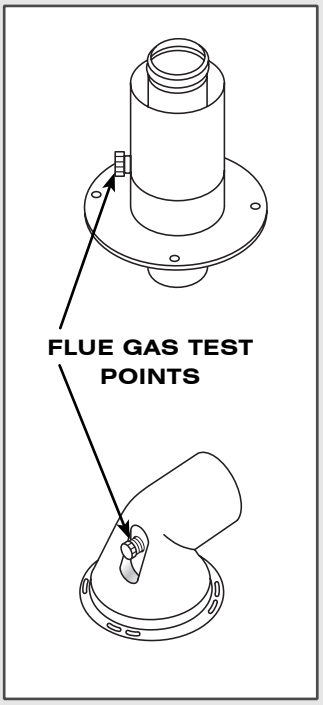

TEST MODE

To put the appliance in test mode, first press ▼ and whilst holding it, press the MODE button and hold both together until the display changes. (Possible 5 second time delay.) If the display shows EHIS press RESET. and try again. The flow and return temperatures are displayed along with the flame current value and the fan speed. Whilst in test mode, the appliance overrides all temperature setting and defaults to maximum rate. Pressing the ▼ and ▲ buttons allows you to scroll between maximum and minimum rates, whilst still overriding all temperature settings*. Press RESET to take the appliance out of test mode. If no changes are made, the appliance will stay in test mode for 30 minutes.

*** On smaller heating systems, running at maximum output MIGHT cause the boiler to go into lockout and display E3. Allow the heating system to cool and press RESET.**

17.2 COLD WATER INLET FILTER

17.2.1 Close the mains inlet valve to the household, open a domestic hot water tap at the lowest point in the system, allow the pressure to dissipate and close this tap. Unclip the plastic electronic component from the top of the turbine, (the wires may be unplugged if necessary) and pull it off. Remove the grommet from the sealed chamber above the turbine and unscrew the complete turbine from the brass housing. The turbine can now be removed upwards. The complete assembly can now be flushed clean using water and re-assemble in reverse order, ensuring that all seals are replaced correctly.

17.2.2 This operation will be made easier by removing the gas manifold / fan assembly as described in section 20.121 to gain access to the cover grommet. Unclip the plastic electronic component from the top of the turbine, the wires may be unplugged if necessary. Remove the grommet from the sealed chamber above the turbine. Unscrew the complete turbine from the brass housing and remove it upwards through the hole in the sealed chamber. Replace in reverse order ensuring the grommet is correctly seated.

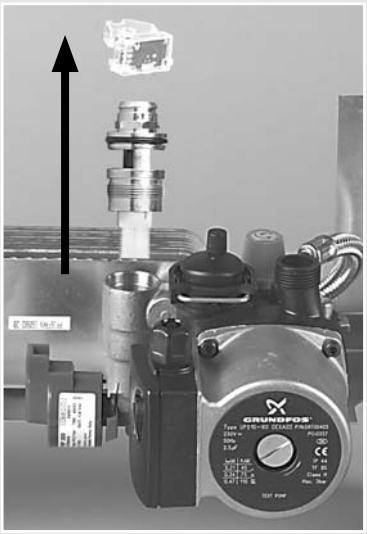

17.3 GAS/AIR DUCT AND INTERNAL VOLUME OF THE BURNER

Remove the cover from the gas/air manifold (8 screws) and inspect the inside of the duct and burner for debris. Clean with a soft brush if necessary. Inspect the 'O' ring seal. Re-assemble the cover ensuring the seal is fitted correctly.

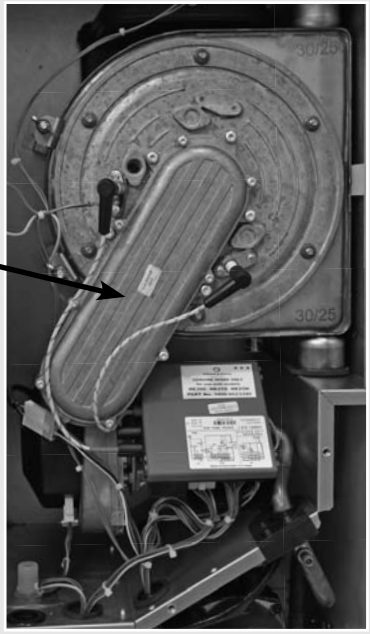

17.4 COMBUSTION ASSEMBLY COMPLETE

Remove the CVBC (refer to section 20.18) and disconnect the gas pipe at the top of the isolation valve, which will already have been turned off. Unscrew the six retaining nuts from the studs that hold the assembly to the heat exchanger, supporting the assembly as the last one (bottom) is removed and slowly withdraw the complete assembly, including the gas inlet pipe and the case seal. As the assembly is withdrawn, disconnect the two electrical connections from the fan. Inspect and clean the spark ignition and flame sensing electrode, removing any debris and oxidization and check the spark gap and position of the spark electrode and the position of the flame-sensing electrode. Refer to illustrations 20.16 and 20.17 and adjust if necessary. Inspect the two seals and the ceramic pad on the inside of the mounting plate and clean or replace as necessary.

17.5 COMBUSTION CHAMBER/HEAT EXCHANGER

Inspect the inside of the combustion chamber for debris. If necessary, brush clean the inside of the tubes with a soft brush. Do not brush the insulation at the rear, if this part is damaged it will require replacement.

17.6 IGNITION AND DETECTION ELECTRODES

Remove the plug cap from the top and the earth wire from the base of the spark electrode. Unscrew the two screws that retain the electrode in the cover plate and remove the assembly. Inspect and clean the electrode, removing any debris and oxidation. If necessary use an abrasive paper or cloth. Inspect the gasket and replace if necessary during re-assembly. Repeat the sequence for the flame detection electrode with the exception of the earth lead.

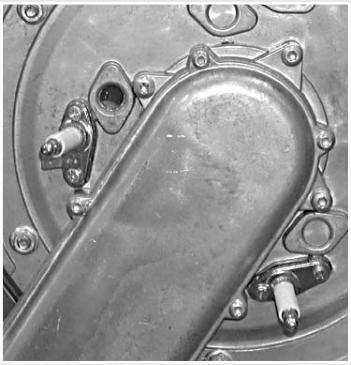

18. DEFECT DIAGNOSIS

18.1 CAUTION

18.1.1 Before commencing any mechanical servicing the appliance should be isolated from the electrical supply and the gas service cock on the appliance closed. All parts that are removed during a service operation should be replaced in reverse order, ensuring correct seals are made and wires are connected correctly. During the service remove any debris from within the appliance. When gas-carrying components are serviced the appliance must be tested for gas tightness after re-assembly. On completion of a service carry out a full functional test of all appliance components and ensure system controls are operating correctly.

18.1.2 Remove the upper front case that is retained by a screw in the top of the appliance.

18.1.3 Remove the control fascia by removing the plastic door, unscrewing the two screws that hold the control pod in place, rotate downward. Unplug the wires, slide the hinge pins inwards and remove the fascia from the appliance.

18.1.4 Remove the sealed door by removing the three screws and lifting the door clear.

18.1.5 Should a fault occur, the boiler will shut down and the letter E followed by an error code will be displayed.

18.2 ATTENTION

The flip door at the bottom of the boiler is held in the closed position. To gain access to the control panel, take hold of the side of the panel at the corners and pull towards you, allowing the door to drop into the open position. To close the flip door, lift up the panel and push shut until it clicks into place.

18.3 ERROR HISTORY MODE

18.3.1 The MMI stores the last 8 error codes and these can be viewed by putting the appliance into error history mode.

18.3.2 To do this, press the **MODE** button and “E H I S” will be displayed on the LCD display. The number in the top right hand-corner is the error index (1 being the most recent) and the number in the bottom right hand corner is the error code that applies to that index number.

18.3.3 The appliance will stay in error history mode for a period of 30 seconds and pressing the ▼ and ▲ buttons allows you to scroll through the error codes stored.

18.3.4 Press RESET to manually take the appliance out of error history mode.

NOTE: all new boilers are shipped with pre-set error codes stored in the memory.

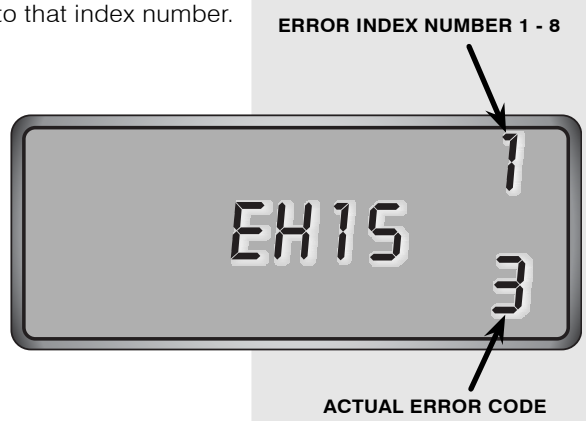

DEFECT DIAGNOSIS

	SYMPTOM	POSSIBLE CAUSE	REMEDY
N/A	Boiler will not run	No call for heat to boiler control board	Check all external controls (if fitted)
			Check settings on time clock
			Check settings of boiler controls
N/A	No DHW output	No call for DHW to boiler control board. No or reduced water flow	Check flow from the appliance is correct
			Check cold water inlet filter
			Check wiring to the flow sensor
			Check operation to flow turbine
1	Flame lockout after several attempts	Flame not detected	Check gas supply and gas cock
			If burner lights, check flame sensor and wiring to control board
			Check operation of gas valve
2	False flame	False flame sensed	Check wiring to CBVC
5	High water temperature limit	Air in boiler No water	Vent boiler
			Check automatic bypass setting
			Check the flow temperature sensor is clipped to flow pipe
			Check the pump
			Check secondary heat exchanger for blockage
7	High flue gas temperature	Reduced water flow	Check insulation at the back of heat exchanger for damage
			Check water content and pump operation
8	Flame circuit error	Flame sensor lead shorted to earth	Check flame detection leads between sensing probe and ignition control board
11	Flow/return sensor calibration error	Flow/return sensors not within 5˚ of each other, within calibration period	Check there is a bypass in the system
			Check the flow/return sensors are fitted to the pipes
10-25	Internal control board fault		Replace main control board
26	Flame signal lost 5 times in 4 minutes	Flame sensor error Falling gas pressure Flue Blockage	Check flame detection lead between sensor and ignition control board
			Check gas supply does pressure fall when boiler fires.
			Check the flue system is not blocked
30	Boiler flow temperature sensor short circuit	Temperature sensor shorted to earth or failed	Check wiring connections for shorting earth
			Check sensor resistance
31	Boiler flow temperature sensor open circuit	Temperature sensor not connected or failed	Check wiring and connections
			Check sensor continuity
32	DHW temperature sensor short circuit	Temperature sensor shorted to earth or failed	Check wiring connection to shorting to earth
			Check sensor resistance
33	DHW temperature sensor open circuit	Temperature sensor not connected or failed	Check wiring and connections
			Check sensor continuity
34	Low mains voltage	Electrical supply fault to property Faulty wiring to appliance	Check incoming mains supply and wiring to appliance
35/36	Power supply fault	No fault on boiler	Boiler power supply should be checked by a qualified electrician
37	Low system water pressure	Water pressure low or sensor failed	Check system pressure on dial gauge and if correct check pressure sensor and wiring
			Re pressurize the system
39	Opentherm sensor (if fitted) shorted to earth	Short circuit in wiring between sensor and control board	Check wiring to sensor
			Check the electrical resistance of the sensor
40	High system water pressure	System water pressure too high Pressure sensor failed	Check cold system pressure
			Check expansion tank charge pressure with system pressure release
			Check pressure sensor
43	Boiler temperature sensor short circuit	Temperature sensor shorted to earth or failed	Check wiring connections for shorting to earth
			Check sensor resistance
44	Boiler return temperature sensor open circuit	Temperature sensor not connected or failed	Check wiring connection
			Check sensor continuity
45	Flue gas temperature sensor short circuit	Short circuit in wiring between sensor and control board	Check wiring to sensor
			Check the electrical resistance of the sensor
46	The flue gas temperature sensor open circuit	Temperature sensor not connected or failed	Check wiring and connections
			Check sensor
99	Communication MMI & CVBC lost	Connection between MMI & CVBC incorrectly made	Check wiring and connections

19. FAULT FINDING FLOW CHART

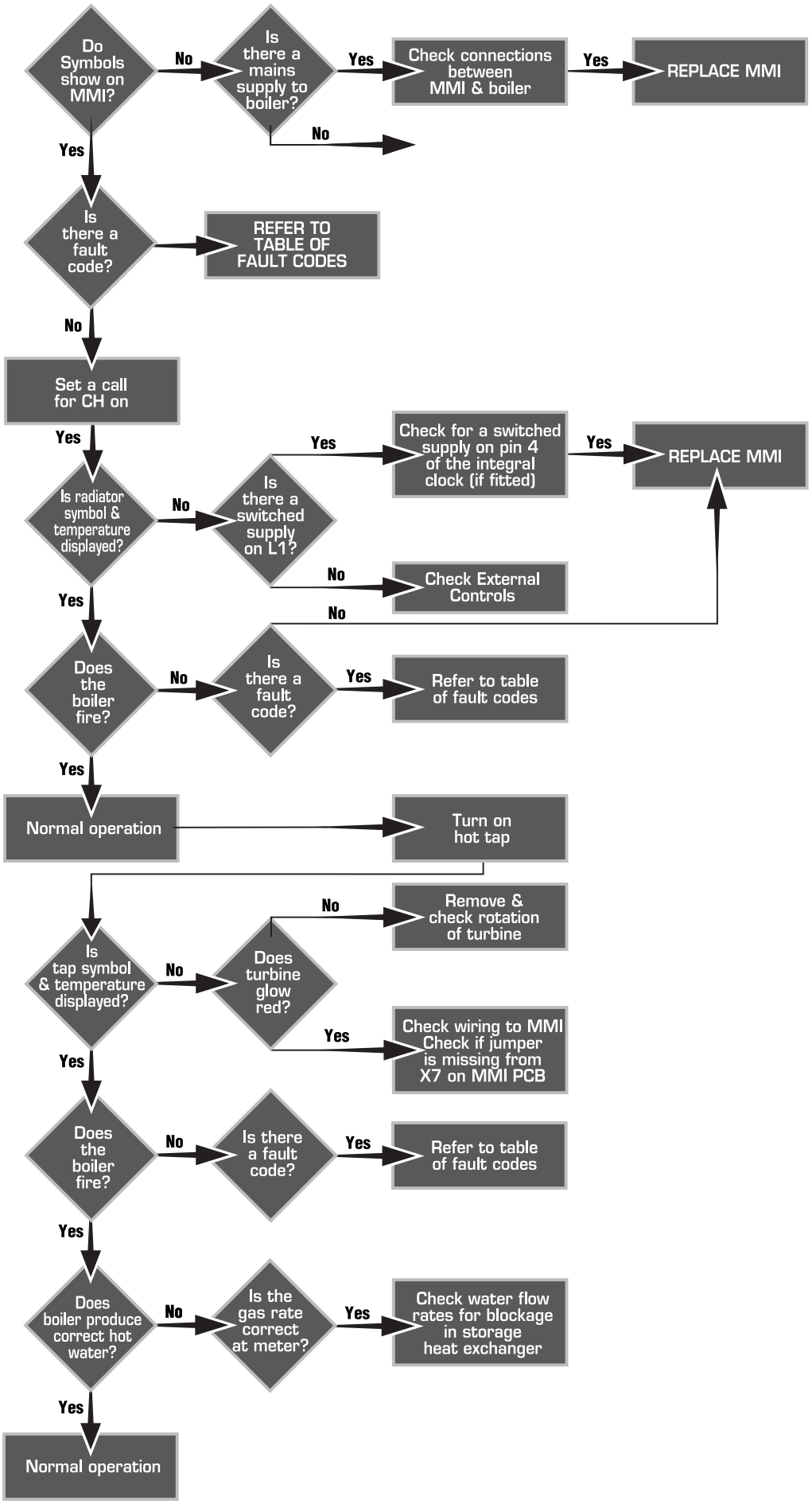

FIGURE 11
FAULT FINDING FLOW CHART

20. PARTS REPLACEMENT

20.1 INITIAL DISASSEMBLY

20.1.1 Remove the upper front case that is retained by a screw in the top of the appliance.

20.1.2 Remove the control facia by removing the plastic door unscrewing the two screws that hold the control module in place, rotate downward. Unplug the wires, slide the hinge pins inwards and remove the fascia from the appliance.

20.1.3 Remove the sealed door by removing the six screws and easing it to the left to disengage it from the LH side of internal casing.

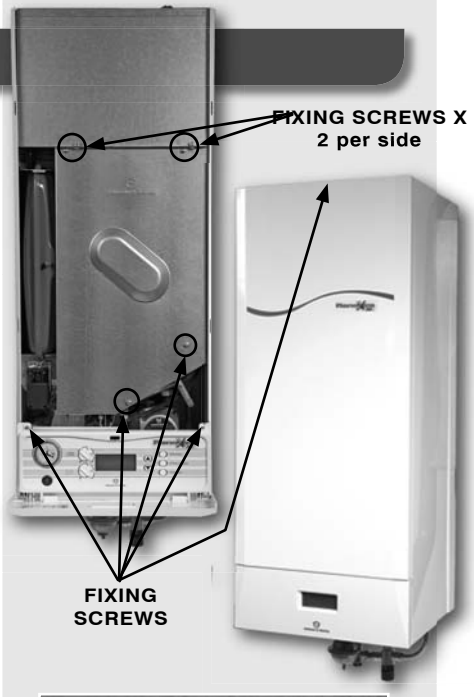

20.2 CONTROL PANEL (COMPLETE)

20.2.1 Because of the complexity and delicate nature of the control PCB, it is supplied as a complete kit with the plastic facia.

20.2.2 Remove the control panel as described at section 20.1.2 and fit the new assembly in reverse order.

20.3 MECHANICAL/ELECTRONIC TIMER

Unscrew the metal cover plate from the rear of the control panel. Unscrew the timer retaining screws and any electrical plug connections. Remove the timer. Replace with a new component in reverse order

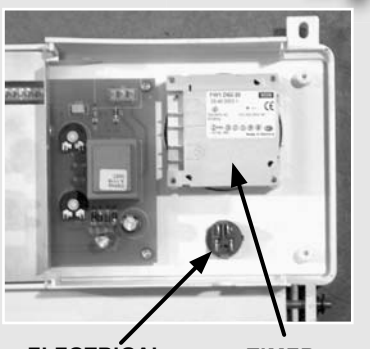

20.4 ELECTRICAL SWITCH

Unscrew the metal cover plate from the rear of the control panel. Unplug the wires from the switch (NOTING THEIR POSITIONS) and remove the switch. Fit the the new switch and reconnect the wires ensuring that they are in the correct position.

20.5 PUMP (COMPLETE)

Close the CH flow and return valves, ensuring the drain point on the flow valve is connected to the appliance side. Drain off the water from within the appliance using the drain valve. Unplug the electrical connector from the flying lead and unscrew the lower screw that retains the pump to the appliance. Withdraw the retaining clip securing the flexible expansion pipe and pull the pipe from the pump. Withdraw the retaining clip at the rear of the body and remove the pump complete. Replace with a new component in reverse order.

20.6 DIVERTER VALVE (MOTORISED HEAD)

Carefully pull the three connectors from the electrical connections on the motorised valve, having made a note of their respective positions. Remove the retaining clip and withdraw the motorised head upwards from the valve. Replace with a new component in reverse order.

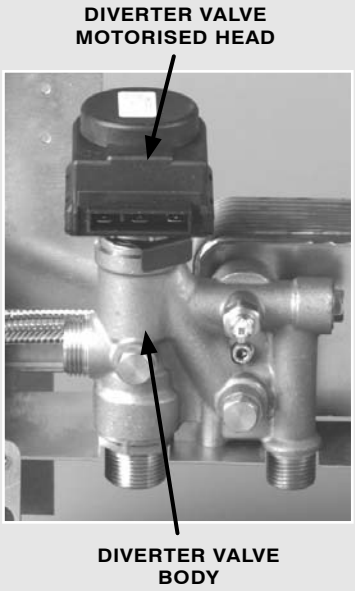

20.7 DIVERTER VALVE (BODY)

Remove the diverter head as described in section 20.6 and drain the CH and DHW circuits from the boiler. Disconnect the electrical supply to the DHW sensor, the CH flow pipe to the radiators and the CH flow pipe from the heat exchanger. Disconnect the DHW out pipe and remove the 2 x M5 clamp head screws from the valve body (1 from the centre of the body the second from below). Remove the complete valve body and unscrew (and retain) the DHW sensor. To replace, refit the DHW sensor in the new valve and refit the complete valve into the boiler following the above instructions but in reverse order.

NOTE: Care MUST be taken to ensure that the replacement 'O' rings are correctly seated!

20.8 EXPANSION VESSEL

Close the CH flow and return valves, ensuring the drain point on the flow valve is connected to the appliance side. Drain off the water from within the appliance using the drain valve. Remove the LH painted case side. Unscrew the flexible hose connection from the expansion vessel. Unscrew the upper retaining bracket and remove the expansion vessel. Replace with a new component in reverse order.

EXPANSION VESSEL

20.9 PRESSURE RELIEF VALVE

Close the CH flow and return valves, ensuring the drain point on the flow valve is connected to the appliance side. Drain off the water from within the appliance using the drain valve. Remove the pump as described in section 20.5. Unscrew the discharge connection and remove the pressure relief valve. Replace with a new component in reverse order.

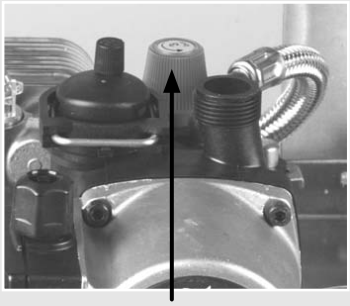

PRESSURE RELIEF VALVE

20.10 PRIMARY WATER TEMPERATURE SENSORS (2 off)

Unplug the two wires from the temperature sensor to be replaced and unclip the sensor from the pipe. Replace with a new component in reverse order. Ensure it is fitted in the same position.

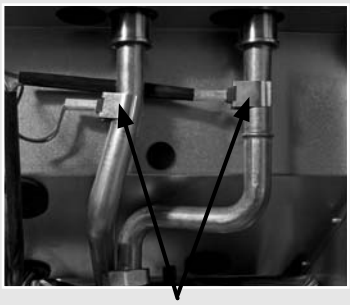

TEMPERATURE SENSORS

20.11 DOMESTIC HOT WATER TEMPERATURE SENSOR

Close the mains inlet valve to the household, open a domestic hot water tap at the lowest point in the system and allow the pressure to dissipate. Close this tap again, carefully remove the two spade connectors from the sensor and unscrew the sensor from the brass body. Replace with a new component in reverse order, ensuring the copper washer is fitted correctly.

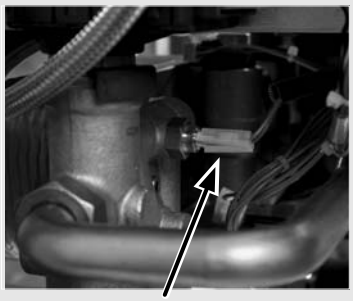

DHW TEMPERATURE SENSORS

20.12 PRIMARY WATER PRESSURE SENSOR

Close the CH flow and return valves, ensuring the drain point on the flow valve is connected to the appliance side. Drain off the water from within the appliance using the drain valve. Unplug the electrical plug connection. Withdraw the retaining clip forwards and remove the pressure sensor. Replace with a new component in reverse order.

TEMPERATURE SENSOR

20.13 DOMESTIC COLD WATER FLOW SENSOR (TURBINE)

20.13.1 Close the mains inlet valve to the household, open a domestic hot water tap at the lowest point in the system and allow the pressure to dissipate. Close this tap again.

20.13.2 This operation will be made easier by removing the gas manifold / fan assembly as described in section 20.21 to gain access to the cover grommet. Unclip the plastic electronic component from the top of the turbine, the wires may be unplugged if necessary. Remove the grommet from the sealed chamber above the turbine. Unscrew the complete turbine from the brass housing and remove it upwards through the hole in the sealed chamber. Replace in reverse order ensuring the grommet is correctly seated.

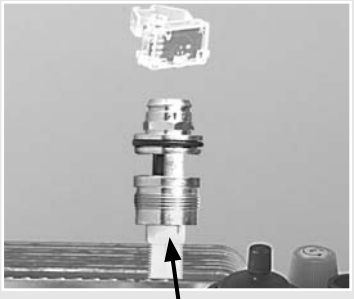

DCW TEMPERATURE SENSOR

20.14 PLATE HEAT EXCHANGER

Close the mains inlet valve to the household, open a domestic hot water tap at the lowest point in the system and allow the pressure to dissipate. Close this tap again. Close the CH flow and return valves, ensuring the drain point on the flow valve is connected to the appliance side. Drain off the water from within the appliance using the drain valve. Unscrew the two retaining screws and remove the plate heat exchanger. Replace with a new component in reverse order.

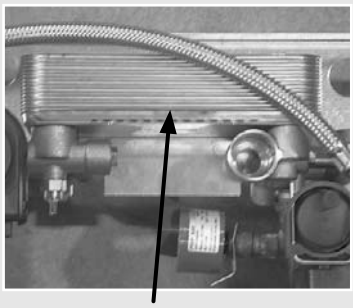

HEAT EXCHANGER

20.15 IGNITION ELECTRODE

Remove the plug cap and the earth wire from the electrode. Remove the two retaining screws and withdraw the electrode. Replace with a new unit, ensuring that the gasket is replaced with a new one, or that the existing gasket reused if it is in good condition.

IGNITION ELECTRODE

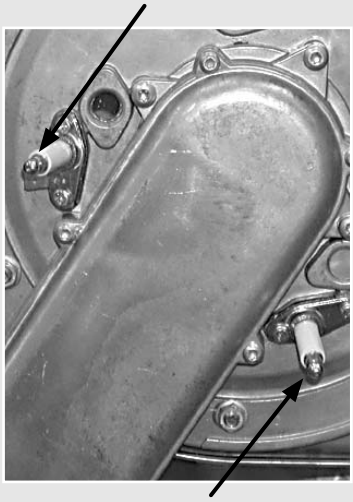

FLAME DETECTION ELECTRODE

20.16 FLAME DETECTION ELECTRODE

Remove the plug cap from the electrode. Remove the two retaining screws and withdraw the electrode. Replace with a new unit, ensuring the gasket is replaced with a new one, or the existing gasket reused if it is in good condition.

IMPORTANT:- CLEARANCES

When either the ignition or flame detection electrodes have been serviced/replaced you MUST set the clearances as shown.

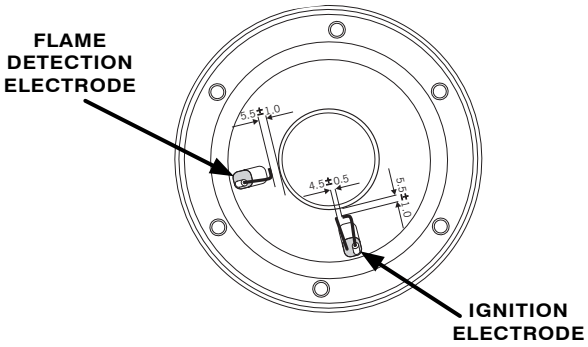

20.17 BURNER

20.19.1 Unscrew the gas joint at the top of the gas cock. Unscrew the fan and gas/air manifold assembly (3 screws) from the heat exchanger. Unplug the multi pin plug connections from the top of the control and the fan. Remove the assembly.

20.19.2 Remove the assembly to allow the burner to be withdrawn from the heat exchanger assembly. Replace with a new component in reverse order. Ensure the rotational position of the burner is correct (indicated by a notch) Replace with a new component in reverse order ensuring that the grommet sealing the casing is correctly positioned.

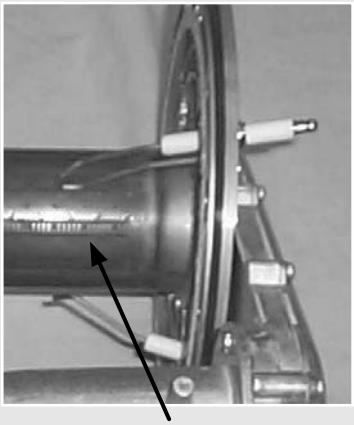

BURNER

20.18 MAIN IGNITION/CONTROL PCB (CVBC GREY/RED HOUSING ON GAS VALVE)

Unplug the multi pin plug connections from the top of the control and remove the spark detection wires. Unscrew the single retaining screw and slide the housing off the gas valve electrical connections. Replace with a new component in reverse order.

NOTE: STARS

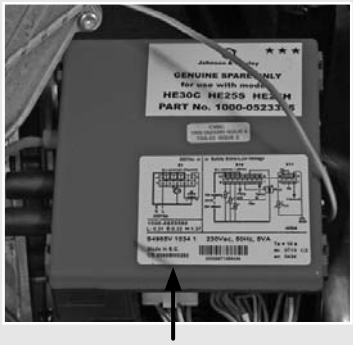

CVBC

20.19 FLUE TEMPERATURE SENSOR

Carefully remove the two spade connectors from the sensor and unscrew the sensor from the plastic flue hood. Replace with a new component in reverse order, taking care not to over tighten!

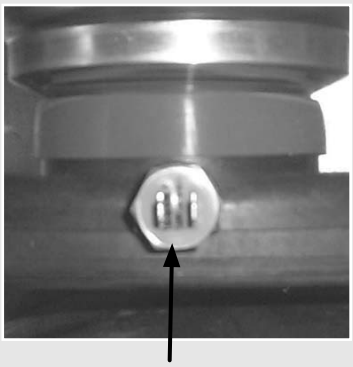

FLUE TEMPERATURE SENSOR

20.20 FAN

Unscrew the gas joint at the top of the gas cock and remove the CVBC (red box) from the gas valve. Unscrew the fan and gas/air manifold assembly (3 screws) from the heat exchanger. Unplug the multi pin plug connections from the top of the control and the fan. Remove the assembly. Replace with a new component in reverse order.

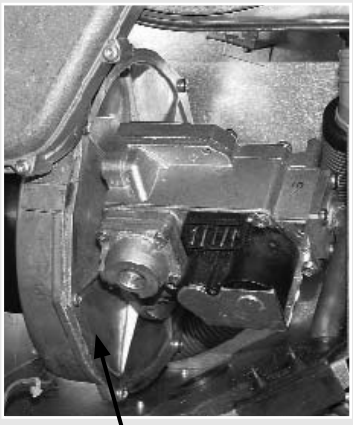

FAN

20.21 GAS VALVE & VENTURI ASSEMBLY

NOTE: the gas valve is factory preset and must not be adjusted. A replacement valve must only be supplied by Johnson & Starley Ltd.

20.21.1 Remove the complete fan assembly as shown at paragraph 20.20 and remove the 4 fixing screws holding the gas feed flange on the gas valve. Remove the 2 fixing screws securing the venturi (and gas valve) to the fan and remove the assembly from the fan carefully removing the gasket.

20.21.2 Replace with a new component in reverse order, ensuring that all seals are in good condition and correctly positioned. Check the gas rate and combustion as described in section 5 Servicing Instructions.

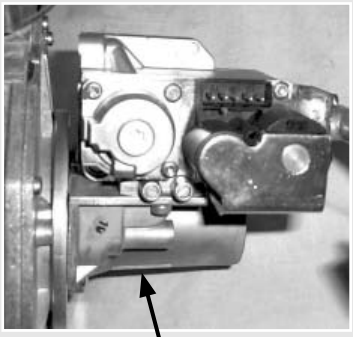

GAS VALVE & VENTURI ASSEMBLY

14. LIST OF SPARES

REFER TO THE EXPLODED DIAGRAM

ITEM	G.C. No.	PART No.		DESCRIPTION	QTY
		RENOXTRA 30C	RENOXTRA 37C		
1		R300-0501005	R380-0501005	Control Panel Assembly	1
2	H23-609	1000-0301485		Pump	1
3	H23-627	1000-0301615		Diverter Valve (Motorised Head)	1
5	H23-610	1000-0019005		Expansion Vessel (with washer)	1
6	H23-613	1000-0522595		Water Temperature Sensors	2
7	H23-630	1000-0301535	1000-0301645	Plate Heat Exchanger (with 'O' rings and fixing screws)	1
8	H23-631	1000-0301625		Domestic Hot Water Flow Sensor (Turbine, flow resistor, filter & hall effect sensor)	1
9		1000-0020325		CH Pressure Sensor, clip & 'O' ring	1
10	H23-623	1000-0522635		Fan, Gasket & Fixing Screws	1
11	H23-624	1000-0709635		Gas Valve, Venturi Assembly	1
12	H23-622	1000-0522645		Flue Temperature Sensor	1
13		R300-0230005	R380-0176005	Heat Exchanger Assembly	1
14		1000-0522685		Ignition Lead	1
15		1000-0522695		Isolation Lead	1
16		1000-0523395	1000-0523405	Main Ignition/Control (CVBC)	1
17		1000-2501425		Seal	1
18		R300-0245005		Gas Saver Box	1
19		1000-0021745		Trap Assembly	1
20		1000-0710205		Female Elbow 15mm - ½ bsp	1
21		1000-0021715		Blending Valve	1
22		1000-0020705		Shock Arrestor (0.16 ltr)	1
24		R300-0243005		Bottom Cover	1
24		R300-0180005		Support Plate Assembly	1
23		1000-0021735		Condensate Drain	1

15. EXPLODED DIAGRAM

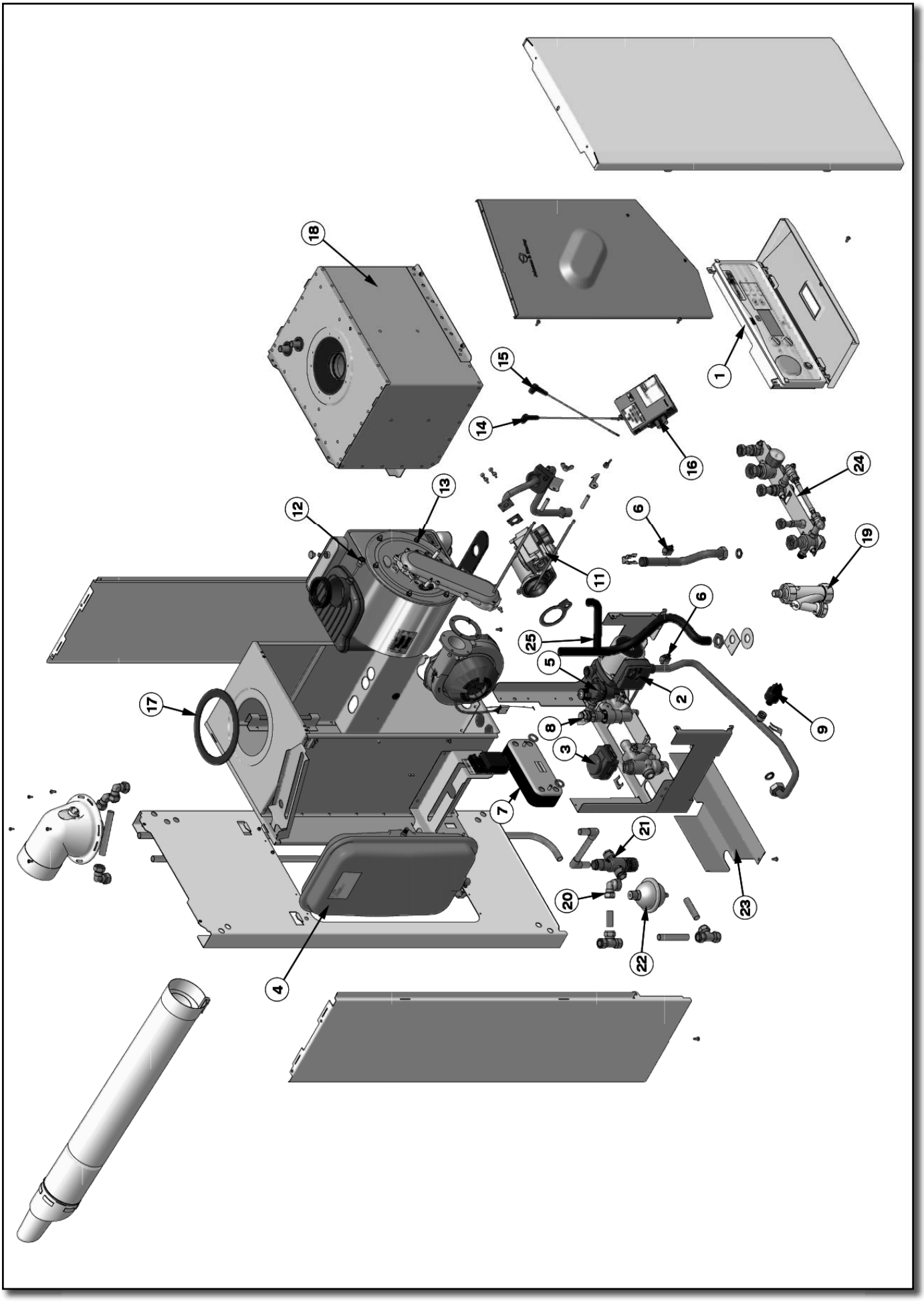

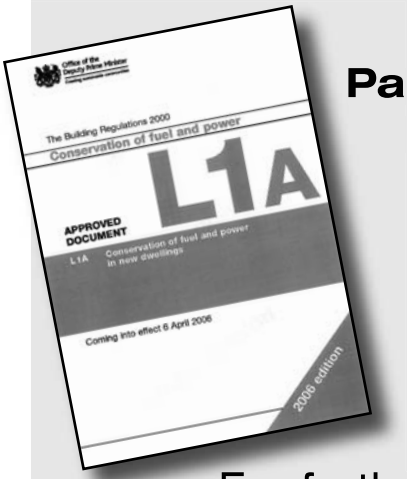

Fully complies with
Part L of the Building Regulations
by following the guidance in the
British Standard BS 5864
and the
Heating Compliance Guide

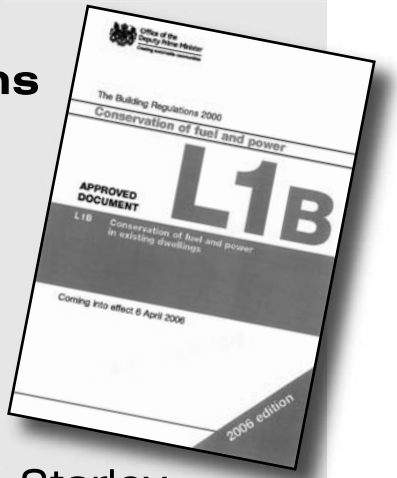

For further information contact Johnson & Starley
on Telephone 01604 762881

ADDITIONAL KITS AVAILABLE

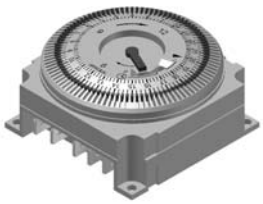

Mechanical Timer
Part No. MTK 1

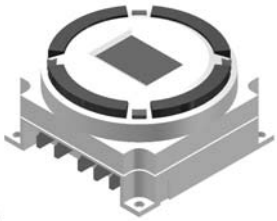

Digital Timer
Part No. MTK 2

A single channel electro/mechanical or digital timing device can be fitted to control the heating periods. Wiring terminals are provided that may be used to connect a room thermostat.

Opentherm Kit
Part No. 1000-0019720

An opentherm kit is available should an outside temperature compensation system be required.

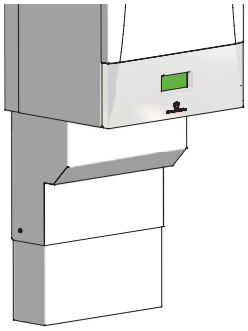

Pipe Cover Kit
Part No. PCK 2

This kit can be used to hide open pipe work showing from the bottom of the boiler.

benchmark
COLLECTIVE MARK
THE MARK OF QUALITY FOR THE INSTALLATION, COMMISSIONING AND SERVICING OF DOMESTIC HEATING AND HOT WATER SYSTEMS

RenoXtra

COMMISSIONING CHECKLIST & SERVICE RECORD

This checklist should be filled out at each annual service

GAS BOILER SYSTEM COMMISSIONING CHECKLIST

This Commissioning Checklist is to be completed in full by the competent person who commissioned the boiler as a means of demonstrating compliance with the appropriate Building Regulations and then handed to the customer to keep for future reference.

Failure to install and commission this equipment to the manufacturer's instructions may invalidate the warranty but does not affect statutory rights.

Customer Name _____ Telephone Number _____

Address _____

Boiler Make and Model _____

Boiler Serial Number _____

Commissioned by *(print name)* _____ CORGI ID Number _____

Company Name _____ Telephone Number _____

Company Address _____

_____ Commissioning Date _____

To be completed by the customer on receipt of a Building Regulations Compliance Certificate*:

Building Regulations Notification Number *(if applicable)* _____

CONTROLS Tick the appropriate boxes

Time and Temperature Control to Heating	Room Thermostat and Programmer/Timer ☐	Programmable Room Thermostat ☐	Load/Weather Compensation ☐	Optimum Start Control ☐
Time and Temperature Control to Hot Water			Cylinder Thermostat and Programmer/Timer ☐	Combination Boiler ☐
Heating Zone Valves			Fitted ☐	Not Required ☐
Hot Water Zone Valves			Fitted ☐	Not Required ☐
Thermostatic Radiator Valves			Fitted ☐	Not Required ☐
Automatic Bypass to System			Fitted ☐	Not Required ☐
Boiler Interlock				Provided ☐

ALL SYSTEMS

The system has been flushed and cleaned in accordance with BS7593 and boiler manufacturer's instructions Yes ☐

What system cleaner was used? _____

What inhibitor was used? _____ Quantity _____ *litres*

CENTRAL HEATING MODE Measure and Record:

Gas Rate	_____ m^3/hr	OR		_____ ft^3/hr
Burner Operating Pressure (if applicable)	_____ mbar	OR	Gas Inlet Pressure	_____ mbar
Central Heating Flow Temperature				_____ °C
Central Heating Return Temperature				_____ °C

COMBINATION BOILERS ONLY

Is the installation in a hard water area (above 200ppm)? Yes ☐ No ☐

If yes, has a water scale reducer been fitted? Yes ☐ No ☐

What type of scale reducer has been fitted? _____

DOMESTIC HOT WATER MODE Measure and Record:

Gas Rate	_____ m^3/hr	OR		_____ ft^3/hr
Burner Operating Pressure (at maximum rate)	_____ mbar	OR	Gas Inlet Pressure (at maximum rate)	_____ mbar
Cold Water Inlet Temperature				_____ °C
Hot water has been checked at all outlets			Yes ☐ Temperature	_____ °C
Water Flow Rate				_____ *l/min*

CONDENSING BOILERS ONLY

The condensate drain has been installed in accordance with the manufacturer's instructions and/or BS5546/BS6798 Yes ☐

ALL INSTALLATIONS

If required by the manufacturer, record the following CO_2 _____ % OR CO _____ *ppm* OR CO/CO_2 Ratio _____

The heating and hot water system complies with the appropriate Building Regulations Yes ☐

The boiler and associated products have been installed and commissioned in accordance with the manufacturer's instructions Yes ☐

The operation of the boiler and system controls have been demonstrated to and understood by the customer Yes ☐

The manufacturer's literature, including Benchmark Checklist and Service Record, has been explained and left with the customer Yes ☐

Commissioning Engineer's Signature _____

Customer's Signature _____

(To confirm satisfactory demonstration and receipt of manufacturer's literature)

*All installations in England and Wales must be notified to Local Authority Building Control (LABC) either directly or through a Competent Persons Scheme. A Building Regulations Compliance Certificate will then be issued to the customer.

benchmark COLLECTIVE MARK
THE MARK OF QUALITY FOR THE INSTALLATION, COMMISSIONING AND SERVICING OF DOMESTIC HEATING AND HOT WATER SYSTEMS

©Heating and Hotwater Industry Council (HHIC)

SERVICE RECORD

It is recommended that your heating system is serviced regularly and that the appropriate Service Record is completed.

Service Provider
Before completing the appropriate Service Record below, please ensure you have carried out the service as described in the manufacturer's instructions.

Always use the manufacturer's specified spare part when replacing controls.

SERVICE 1 Date
Energy Efficiency Checklist completed? Yes ☐ No ☐
Engineer Name
Company Name
Telephone Number
CORGI ID Number
Comments
Signature

SERVICE 2 Date
Energy Efficiency Checklist completed? Yes ☐ No ☐
Engineer Name
Company Name
Telephone Number
CORGI ID Number
Comments
Signature

SERVICE 3 Date
Energy Efficiency Checklist completed? Yes ☐ No ☐
Engineer Name
Company Name
Telephone Number
CORGI ID Number
Comments
Signature

SERVICE 4 Date
Energy Efficiency Checklist completed? Yes ☐ No ☐
Engineer Name
Company Name
Telephone Number
CORGI ID Number
Comments
Signature

SERVICE 5 Date
Energy Efficiency Checklist completed? Yes ☐ No ☐
Engineer Name
Company Name
Telephone Number
CORGI ID Number
Comments
Signature

SERVICE 6 Date
Energy Efficiency Checklist completed? Yes ☐ No ☐
Engineer Name
Company Name
Telephone Number
CORGI ID Number
Comments
Signature

SERVICE 7 Date
Energy Efficiency Checklist completed? Yes ☐ No ☐
Engineer Name
Company Name
Telephone Number
CORGI ID Number
Comments
Signature

SERVICE 8 Date
Energy Efficiency Checklist completed? Yes ☐ No ☐
Engineer Name
Company Name
Telephone Number
CORGI ID Number
Comments
Signature

SERVICE 9 Date
Energy Efficiency Checklist completed? Yes ☐ No ☐
Engineer Name
Company Name
Telephone Number
CORGI ID Number
Comments
Signature

SERVICE 10 Date
Energy Efficiency Checklist completed? Yes ☐ No ☐
Engineer Name
Company Name
Telephone Number
CORGI ID Number
Comments
Signature

Johnson & Starley

Johnson & Starley are the leading UK & European manufacturers of a complete range of **Domestic Warm Air Heaters**.
All the heaters suit both **Replacement** and **Upgrade** needs and are compliant with the new (2006) amendments to Part L of the Building Regulations.

HOME COMFORT SOLUTIONS

Company Details

Website Address	**www.johnsonandstarley.co.uk**
Email	**sales@johnsonandstarley.co.uk**
	marketing@johnsonandstarley.co.uk
Telephone Number	**01604 762881 (Main switchboard)**
Fax Number	**01604 767408**

Spares

Telephone	**01604 707012**
Fax	**01604 762884**

Sales

Telephone	**01604 707012**
Fax	**01604 764879**

Service

Telephone	**01604 707011**
Fax	**01604 707017**

Warm Air Upgrade Enquiry Service

Telephone	**01604 707026**
Fax	**01604 707017**

COMMERCIAL & INDUSTRIAL H&V SOLUTIONS

Company Details

Johnson & Starley **Dravo Division Industrial H&V**

Website Address	**www.dravo.co.uk**
Email	**dravo@johnsonandstarley.co.uk**
Telephone Number	**01604 707022**
Fax Number	**01604 706467**

RELIABILITY YOU CAN TRUST

Rhosili Road, Brackmills, Northampton NN4 7LZ

In the interest of continuous development Johnson & Starley Ltd reserve the right to change specifications without prior notice