221970C.02.05

Saunier Duval

Instructions for Use Installation and Servicing

To be left with the user

Xeon 50ff

Fanned Flue Boiler (S.I.T.)

GC No. 41-920-41

benchmark™ COLLECTIVE MARK

The code of practice for the installation, commissioning & servicing of gas central heating

This is a Cat II_{2H3P} Appliance

Reference in these instructions to British Standards and Statutory Regulations/Requirements apply only to the United Kingdom. For Ireland the rules in force must be used.

7336

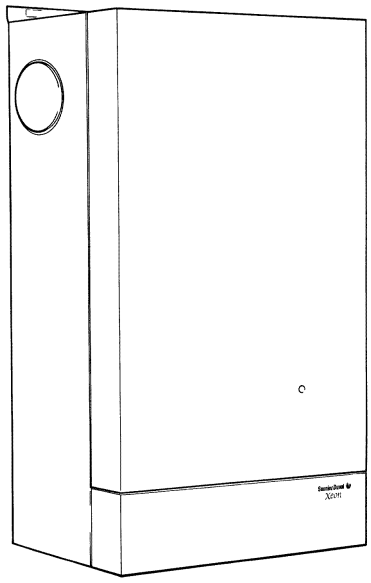

The instructions consist of three parts, User, Installation and Servicing Instructions. The instructions are an integral part of the appliance and must, to comply with the current issue of the Gas Safety (Installation and Use) Regulations, be handed to the user on completion of the installation.

Guarantee Registration

Thank you for installing a new Saunier Duval appliance in your home.

Saunier Duval appliances' are manufactured to the very highest standard so we are pleased to offer our customers' a Comprehensive First Year Guarantee.

We recommend you complete and return your Guarantee Registration Card as soon as possible.

If this card is missing you can obtain a copy or record your registration by telephoning the Customer Service number 01773 525914.

Our Guarantee gives you peace of mind plus valuable protection against breakdown by covering the cost of:

- ☑ ***All replacement parts***
- ☑ ***All labour charges***
- ☑ ***All call-out charges***

REGISTER YOUR SAUNIER DUVAL APPLIANCE FOR 1ST YEAR GUARANTEE PROTECTION

CALL 0800 073 2144

Saunier Duval SERVICE

Tel: (01773) 525914

Fax: (01773) 828070

Nottingham Road, Belper, Derbyshire. DE56 1JT

General/Sales enquiries:

Tel: (0870) 6064351 Fax: (01773) 820569

Important Information

TESTING AND CERTIFICATION

This boiler is tested and certificated for safety and performance. It is therefore important that no alteration is made to the boiler, without permission, in writing, from Saunier Duval.

Any alteration not approved by Saunier Duval., could invalidate the certification, boiler warranty and may also infringe the current issue of the Statutory Requirements, see Section 1.4.

CE MARK

This boiler meets the requirements of Statutory Instrument No. 3083 The boiler (Efficiency) Regulations, and therefore is deemed to meet the requirements of Directive 92/42/EEC on the efficiency requirements for new hot water boilers fired with liquid or gaseous fuels.

Type test for purposes of Regulatioon 5 certified by: Notified body 0086.

Product/productioncertifiedby: Notified body 0086.

The CE mark on this appliance shows compliance with:

1. Directive 90/396/EEC on the approximation of the laws of the Member States relating to appliances burning gaseous fuels.
2. Directive 73/23/EEC on the harmonization of the Laws of the Member States relating to the electrical equipment designed for use within certain voltage limits.
3. Directive 89/336/EEC on the approximation of the Laws of the Member States relating to electromagnetic compatibility.

INFORMATION FOR THE INSTALLER AND SERVICE ENGINEER.

Under Section 6 of The Health and Safety at Work Act 1974, we are required to provide information on substances hazardous to health.

Ceramic fibre/Insulation Pads

These can cause irritation to skin, eyes and the respiratory tract. If you have a history of skin complaint you may be susceptible to irritation. High dust levels are usual only if the material is broken. Normal handling should not cause discomfort, but follow normal good hygiene and wash your hands before eating, drinking or going to the lavatory. If you do suffer irritation of the eyes or severe irritation to the skin seek medical attention.

Thermostats

These contain very small amounts of xylene in the sealed phial and capillary. If broken, under normal circumstances the fluid does not cause a problem, but in case of skin contact, wash with cold water. If swallowed drink plenty of water and seek medical attention.

Cut-off Devices

These contain activated charcoal and a very small amount of chlorodifluormethane in the sealed phial and capillary. If broken, under normal circumstances the fluid does not cause a problem. If there is irritation to the eyes or skin then seek medical attention.

SPARE PARTS

REMEMBER: when replacing a part on this appliance, use only spare parts that you can be assured conform to the safety and performance specification that we require. Do not use reconditioned or copy parts that have not been clearly authorised by Saunier Duval.

CONTENTS	DESCRIPTION	SECTION	PAGE No.
INSTRUCTIONS FOR USE	Introduction		3
	Lighting the Boiler		4
INSTALLATION INSTRUCTIONS	General Data	1	5
	Flue & Ventilation	2	8
	Water Systems	3	9
	Flue and Appliance Preparation	4	13
	Boiler Installation	5	18
	Commissioning	6	22
	Instructions to User	7	25
SERVICING INSTRUCTIONS	Servicing	8	25
	Fault Finding	9	27
	Replacement Parts	10	33
	Spare Parts	11	36

Instructions for Use

Introduction

WARNING: It is important that the case (not the controls tray) is not disturbed or removed other than for servicing by a **competent person**.

Please read these instructions and follow them carefully for the safe and economical use of your boiler.

The Xeon ff series are fanned flue boilers designed to provide central heating and indirect domestic hot water.

The boiler is fully automatic in operation having only one user control, the control thermostat.

IMPORTANT NOTICE

If your boiler has been converted to use L.P.G. Propane the following note applies:

Propane cylinders are used under pressure and should never be stored or used indoors residentially.

They should only be kept outside.

Under no cicumstances should L.P.G. Propane cylinders be fitted or stored in basement areas or boiler houses.

The Gas Safety (Installation and Use) Regulations

In your interest and that of gas safety it is the law that ALL gas appliances are installed by a **competent person** in accordance with the above regulations.

Gas Leak or Fault

If a gas leak or fault exists or is suspected, the boiler must be turned off, including the electrical supply and must not be used until the fault has been put right.

Advice/help should be obtained from your installation/servicing company or the local gas undertaking.

Electrical Supply Failure

Failure of the electrical supply will cause the burner to go out. Should this occur, operation of the appliance will normally resume after the electrical supply is restored.

If the boiler does not relight after an electrical supply failure the overheat safety cutoff device may need resetting, remove the controls cover and press the reset button, refer to diagram 1.

Overheat Safety Cutoff

If the overheat safety cutoff device operates on any other occasion than an electrical supply failure, press the reset button as in “Electrical Supply Failure”. If the overheat operates again, turn the appliance off and contact your installation/servicing company.

Maintenance

To ensure the continued efficient and safe operation of the boiler it is recommended that it is checked and serviced as necessary at regular intervals. The frequency of servicing wn-l depend upon the particular installation conditions and usage, but in general once a year should be enough.

If this appliance is installed in a rented property there is a duty or care imposed on the owner of the property by the current issue of The Gas Safety (Installation and Use) Regulations, Section 35.

It is the law that any servicing is carried out by a **competent person**.

To obtain service, please call your installer or (Saunier Duval’s own service organisation) using the telephone number on the front cover of this booklet.

Please be advised that the ‘Benchmark’ logbook should be completed by the installation engineer on completion of commissioning and servicing.

All CORGI Registered Installers carry a CORGI ID card, and have a registration number. Both should be recorded in your boiler Logbook. You can check your installer is CORGI registered by calling CORGI direct on :- 01256 372300.

Boiler Clearances

If fixtures are positioned close to the boiler space must be left as shown in diagram 2. At least a minimum clearance of 500mm must be left in front of the boiler to allow for servicing.

Boilers Installed in a Compartment or Cupboard

If the boiler is installed in a compartment or cupboard do not obstruct any ventilation openings.

Do not use the compartment or cupboard for storage.

Cleaning

WARNING: This appliance contains metal parts (components) and care should be taken when handling and cleaning, with particular regard to edges.

Clean the casing occasionally by wiping it over with a damp cloth or dry polishing duster. Do not use an abrasive cleaner.

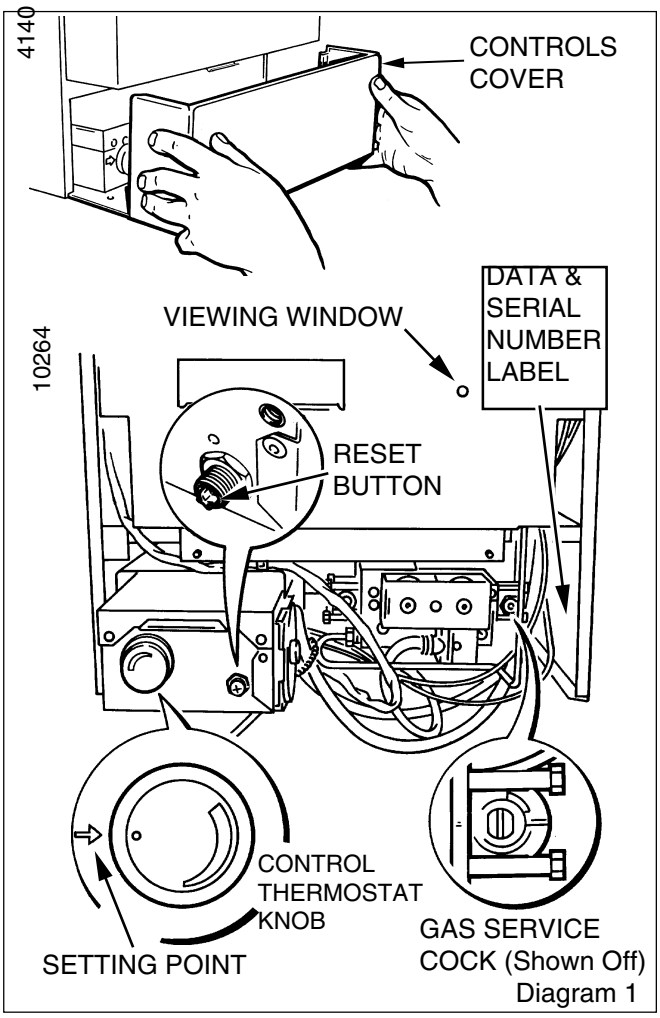

Diagram 1

Boiler Electrical Supply

WARNING: This boiler must be earthed.

The boiler must only be connected to a 230V~50Hz supply protected by a 3A fuse.

All system components shall be of an approved type and shall be connected in accordance with the current issue of BS7671 and any applicable local regulations.

External wiring must be correctly earthed, polarised and in accordance with the relevant standards.

In GB this is BS 6891.

In IE this is the current edition of I.S.813 "Domestic Gas Installations".

Wiring to the boiler must be PVC insulated type to the current issue of BS6500 Table 16, not less than 0.75mm^2 (24/0.20mm).

The colours of three core flexible cable are:

Brown - live, Blue - neutral,

Green/yellow - earth.

As the markings on your plug may not correspond with these colours continue as follows:

The cable coloured blue must be connected to the terminal marked “N” or black.

The cable coloured brown must be connected to the terminal marked “L” or red.

The cable coloured green/yellow must be connected to the terminal marked “E”, or green or the earth symbol ⏚ .

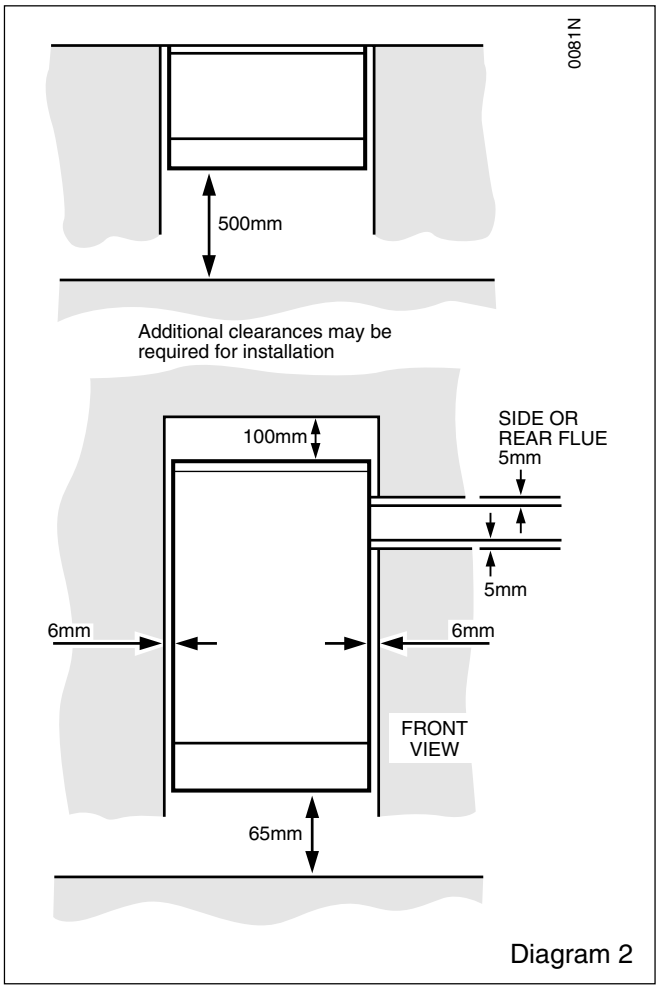

Diagram 2

To Light the Boiler

WARNING: Sealed Systems.

Do not operate the boiler without water.

A sealed water system must be filled and pressurised by a **competent person**.

Only light the boiler when you are sure that the system has been filled and pressurised.

The pressure gauge should show at least 0.7bar, anything less than this figure could indicate a leak and you MUST contact your installation/servicing company.

If there is any doubt about the boiler being full of water consult your installation/servicing company.

ALL SYSTEMS.

Turn the electrical supply on to the boiler and check that all remote controls are calling for heat.

To Turn the Boiler On

Remove the controls cover, by withdrawing it forward and off, see diagram 1.

Turn the control thermostat knob clockwise to any position between MIN and MAX. The maximum temperature setting is about 82°C (180°F), see diagram 1.

The boiler lighting operation is now automatic as follows.

The fan operates, followed by an ignition spark until the pilot is lit. When the pilot is alight the ignition system switches off and the main burner lights. The flames can be seen through the viewing window, see diagram 1.

The main burner will remain alight until switched off by the control thermostat or any remote control.

If the boiler is switched OFF, by hand, wait at least 30 seconds before switching on again.

When the boiler switches off, both the pilot and main burner go out.

The automatic lighting sequence will operate again when heat is required.

Refit the controls cover.

It should be noted that this is a fan flue appliance and fan operation may be heard.

To Turn the Boiler Off

For short periods, turn the control thermostat knob anti-clockwise to “O” Off. To relight, turn the control thermostat knob to any position between “MIN” and “MAX”.

For longer periods, turn the control thermostat knob fully anti-clockwise to “O” Off and switch off the electrical supply to the boiler.

To relight follow the lighting sequence given above.

Protection Against Freezing.

If the boiler is to be out of use for any long period of time during severe weather conditions we recommend that the whole of the system, including the boiler, be drained off to avoid the risk of freezing up. Make sure that, if fitted, the immersion heater in the cylinder is switched off.

For the position of the serial number, see diagram 1.

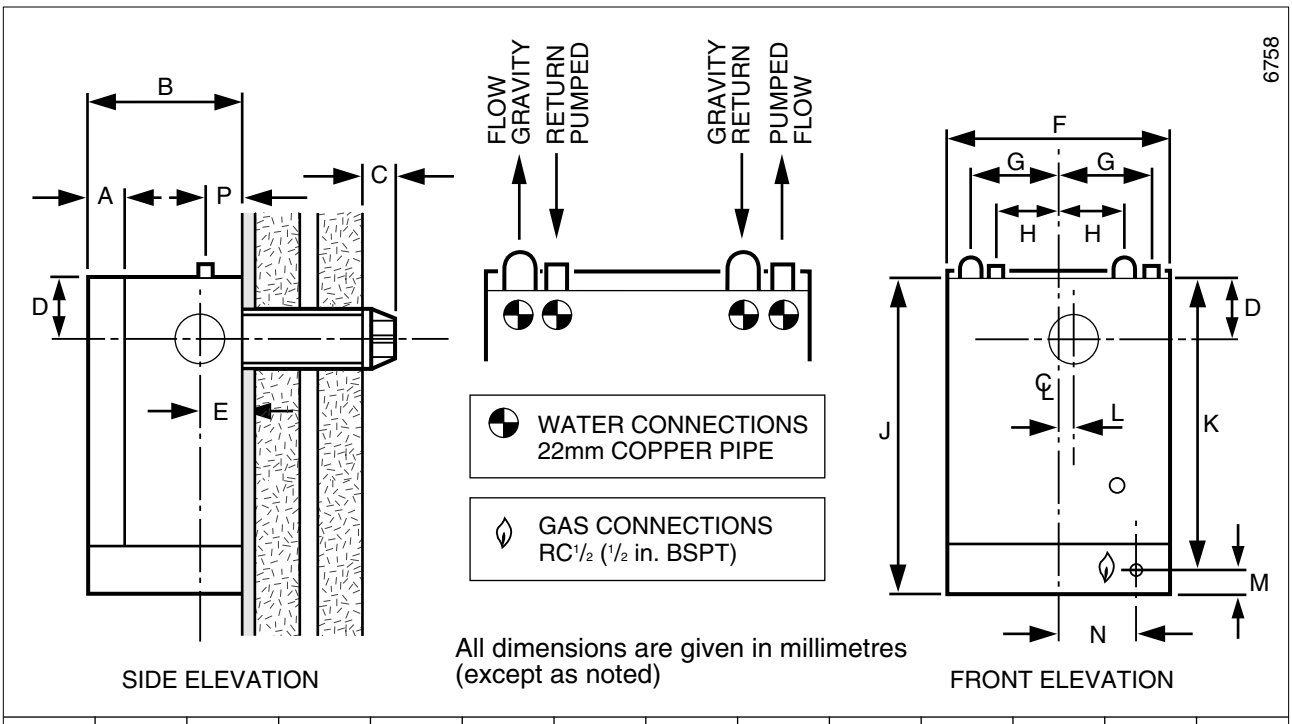

A	B	C	D	E	F	G	H	J	K	L	M	N	P
70	300	63	146	78	360	139	87	700	574	14	60	130	38

Diagram 1.1

IMPORTANT NOTICE

This boiler is for use only on **Natural Gas (G20)**, but may be converted for use on L.P.G. Propane (G31) with the use of a conversion kit.

For the 50ff/LP, Kit No. 2000462102 should be used.

This boiler can be used on open vented or sealed water systems.

When used on an open vented system domestic hot water can be provided by gravity or pumped circulation.

Wherever possible, all materials, appliances and components used shall comply with the requirements of applicable British Standards.

Where no British Standard exists, materials and equipment should be fit for their purpose and of suitable quality and workmanship.

Sheet Metal Parts

WARNING: When installing or servicing this boiler care should be taken when handling sheet metal parts, to avoid any possibility of personal injury.

Manual Handling Guidance

During the appliance installation it will be necessary to employ caution and assistance whilst lifting as the appliance exceeds the recommended weight for a one man lift.

In certain situations it may be required to use a mechanical handling aid.

Take care to avoid trip hazards, slippery or wet surfaces.

1.1 Statutory Requirements

In GB the installation of the boiler must be carried out by a **competent person** as described in the following regulations:

The manufacturer's instructions supplied.

The Gas Safety (Installation and Use) Regulations.

The appropriate Buildings Regulations either The Building Regulations, The Building Regulations (Scotland),The Building Regulations (Northern Ireland).

The Water Fittings Regulations or Water byelaws in Scotland.

The Health and Safety at Work Act, Control of Substances Hazardous to Health (COSHH).

The Current I.E.E. Wiring Regulations.

Where no specific instructions are given, reference should be made to the relevant British Standard Code of Practice.

In IE, the installation must be carried out by a **competent person** and installed in accordance with the current edition of I.S.813 "Domestic Gas Installations", the current Building Regulations and reference should be made to the current ETCI rules for Electrical Installation.

In GB the following Codes of Practice apply:

BS4814, BS6798, BS5440 Part 1 and 2, BS5546 Part 1, BS5449, BS6891, BS6700, BS7074 Part 1 and 2, BS7593, BS7671.

In IE: I.S.813, BS5546, BS 5449, BS 7074, BS 7593.

Manufacturer's instructions must not be taken as overriding statutory requirements

1.2 Data

See Table 1 and diagram 1.1

All dimensions are given in millimetres (except as noted).

The Seasonal Efficiency Domestic Boilers UK (SEDBUK) is 78.7%.

The value is used in the UK Government's Standard Assessment Procedure (SAP) for energy rating of dwellings. The test data from which it has been calculated have been certified by B.S.I.

1.3 Range Rating

This boiler is range rated and may be adjusted to suit individual system requirements.

See diagram 1.2 for the ratings and settings.

9939

DATA TABLE 1.				
TOTAL DRY WEIGHT (Including Terminal)	43.4kg (96lb)			
LIFT WEIGHT	37.7kg (83lb)			
WATER CONTENT	2.35L 0.52gal			
GAS CONNECTION	Rc ½ in.			
ELECTRICITY RATING	56W			
	Internal fuse Type F1A			
WATER CONNECTION	4x22mm copper pipes from top of case			
ELECTRICITY SUPPLY	230V~50Hz, fused 3A			
DATA LABEL	Bottom right hand side of case			
		Min.	Medium	Max.
APPROX. GAS RATE	m^3/h	1.38	1.51	1.67
	ft^3/h	49	53	59

9940

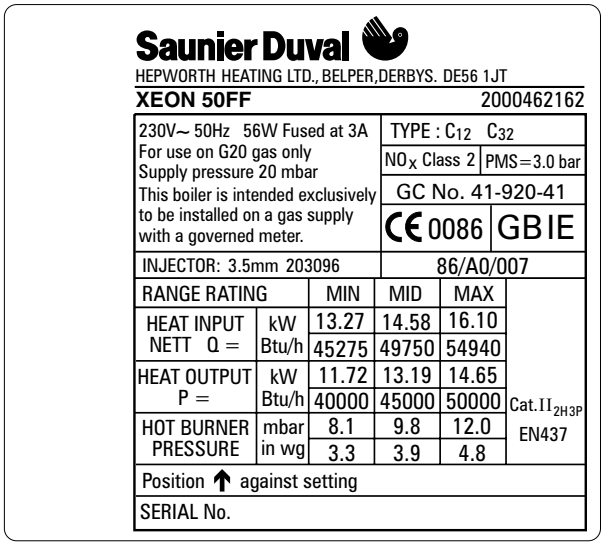

Diagram 1.2

1.4 Testing and Certification

This boiler is tested and certificated for safety and performance. It is, therefore, important that no alteration is made to this boiler unless approved, in writing, by Saunier Duval.

Any alteration not approved by Saunier Duval., could invalidate certification, boiler warranty and could also infringe the statutory requirements.

1.5 Gas Supply

The gas installation shall be in accordance with the relevant standards.

In GB this is BS6891.

In IE this is the current edition of I.S.813 "Domestic Gas Installations".

The supply from the governed meter must be of adequate size to provide a steady inlet working pressure of 20mbar (8in wg) at the boiler.

On completion test the gas installation using the pressure drop method and suitable leak detection fluid, purge in accordance with the current issue of BS6891.

1.6 Electrical Supply

WARNING: This boiler must be earthed.

All system components shall be of an approved type and shall be connected in accordance with the current issue of BS7671 and any applicable local regulations.

External wiring must be correctly earthed, polarised and in accordance with the relevant standards.

In GB this is BS 6891.

In IE this is the current edition of I.S.813 "Domestic Gas Installations".

Connection of the boiler and system controls to the mains supply must be through a common isolator and must be fused 3A, maximum. This method of connection must be by a fused double pole isolating switch, with a minimum contact separation of 3mm on both poles. The switch should be readily accessible and preferably adjacent to the appliance. It should supply the appliance only and be easily identifiable as so doing.

Alternatively, an unswitched shuttered socket outlet and 3A fused 3 pin plug, both to the current issue of BS1363 may be used provided that they are not used in a room containing a bath or shower.

Wiring to the boiler must be to the current issue of BS6500 Table 16, not less than 0.75mm² (24/0.20mm).

1.7 Contents of Packaging

The boiler is delivered in one pack, refer to Section 4.1 for contents.

1.8 Water System

This boiler may be fitted to an open vented or a sealed water system.

1.9 Drain

System

A drain tap must be provided at the lowest points of the system which will allow the entire system, boiler and hot water cylinder to be drained.

Draining taps should be to the current issue of BS2879.

Boiler

A draining point is fitted at the bottom right hand side of the heat exchanger.

Cover the controls to avoid water damage.

If required remove the combustion chamber front cover to improve access.

1.10 Safety Valve

A safety valve need not be fitted to an open vented system.

1.11 Location

This boiler is not suitable for outdoor installation.

This boiler is suitable for installation in bathroom zones 2 and 3.

This boiler may be installed in any room, although particular attention is drawn to the installation of a boiler in a room containing a bath or shower where reference must be made to the relevant requirements.

In GB this is the current I.E.E. WIRING REGULATIONS and BUILDING REGULATIONS.

In IE reference should be made to the current edition of I.S.813 "Domestic Gas Installations" and the current ETCI rules.

Any electrical switch or boiler control utilising mains electricity should be placed so that it cannot be touched by a person using the bath or shower. The electrical provisions of the Building Standards (Scotland) apply to such installations in Scotland.

The boiler must be mounted on a flat wall which is sufficiently robust to take its total weight.

The boiler may be fitted to a wall made of combustible material.

1.12 Boiler Clearances

Refer to diagram 1.3.

This boiler must be positioned so that at least the minimum operational and servicing clearances are provided.

Additional clearances may be required for installation.

If fixtures are positioned next to the boiler they should be made removable for access to pipework.

At least a minimum clearance of 500mm must be left in front of the boiler for servicing, see diagram 1.3.

1.13 Room Ventilation

The boiler is room sealed and does not require the room or space containing it to have permanent air vents.

1.14 Boilers in a Compartment

Where the installation of the boiler will be in an unusual position, special requirements are needed, the current issue of BS6798 gives detailed guidance on these requirements.

A compartment used to enclose the boiler must be designed and constructed specifically for this purpose. An existing cupboard or compartment modified for the purpose may be used. Details of essential requirements for cupboard or compartment design are given in the current issue of BS6798.

The doorway opening should be of sufficient size to allow for easy removal of the boiler.

Where the boiler is fitted in a cupboard or compartment, permanent high and low level ventilation must be provided. The minimum ventilation areas required are given in Table 2.

1.15 Timber Frame Building

If the boiler is to be installed in a timber frame building it should be fitted in accordance with the Institute of Gas Engineers document IGE/UP/7/1998. If in doubt seek advice from the local gas undertaking or Saunier Duval.

1.16 Heating System Controls

The heating system should have installed: a programmer and room thermostat controlling the boiler.

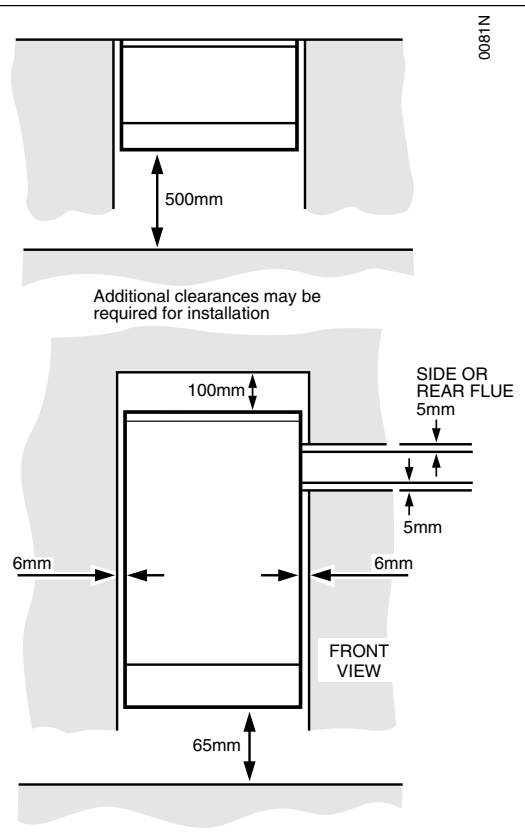

MINIMUM CLEARANCES FROM WALLS, CEILING, FLOOR, CUPBOARD, WORKTOPS AND INFLAMMABLE MATERIALS Diagram 1.3

TABLE 2. COMPARTMENT AIR VENTS					6760
VENTILATION REQUIREMENTS	HIGH LEVEL VENT AREA		LOW LEVEL VENT AREA		
	cm^2	in^2	cm^2	in^2	
VENTILATION FROM ROOM OR SPACE	165	25	165	25	
VENTILATION FROM OUTSIDE	83	12.5	83	12.5	

Thermostatic radiator valves may be installed, however they must not be fitted in a room where a room thermostat is located.

NOTE: For further information, see the current issue of the Building Regulations, approved document L1, and the references:

1) GIL 59, 2000: Central heating system specification (CheSS) and

2) GPG 302, 2001: Controls for domestic central heating system and hot water. BRECSU.

NOTE: Detailed recommendations for flues are given in the current issue of BS5440 Part 1.

2.1 Terminal Position

The minimum acceptable siting dimensions for the terminal from obstructions, other terminals and ventilation openings are shown in diagram 2.1.

The terminal must be exposed to the external air, the position allowing free passage of air across it at all times.

Car ports or similar extensions of a roof only, or a roof and one wall, require special consideration with respect to any openings, doors, vents or windows under the roof. Care is required to protect the roof if it is made of plastic sheeting. If the car port consists of a roof and two or more walls, seek advice from the local gas company before installing the boiler.

If the terminal is fitted within 600mm below plastic guttering or painted soffit an aluminium shield 1500mm long should be fitted immediately beneath the guttering or eaves. If the terminal is fitted within 450mm below painted eaves or a painted gutter, an aluminium shield 750mm long should be fitted immediately beneath the guttering or eaves.

2.2 Terminal Guard

A terminal guard is required if persons could come into contact with the terminal or the terminal could be subject to damage.

If a terminal guard is required, it must be positioned to provide a minimum of 50mm clearance from any part of the terminal and be central over the terminal.

A suitable guard, reference Type “K3”, can be obtained from:-

Tower Flue Components Ltd
Morley Road
Tonbridge
Kent. TN9 1RA

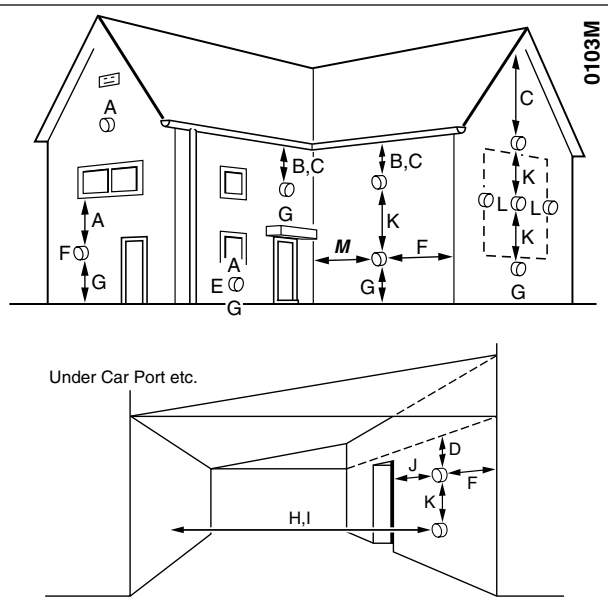

	MINIMUM SITING DIMENSIONS FOR FANNED FLUE TERMINALS POSITION	MINIMUM SPACING in mm
A	DIRECTLY BELOW, ABOVE OR HORIZONTALLY TO AN OPENING, AIR BRICK, OPENING WINDOWS, AIR VENT OR ANY OTHER VENTILATION OPENING.	300
B	BELOW GUTTER, DRAIN/SOIL PIPE	75
C	BELOW EAVES	200
D	BELOW A BALCONY OR CAR PORT	200
E	FROM VERTICAL DRAIN PIPES AND SOIL PIPES	75
F	FROM EXTERNAL CORNERS	300
G	ABOVE ADJACENT GROUND OR BALCONY LEVEL	300
H	FROM A SURFACE FACING THE TERMINAL	600
I	FACING TERMINALS	1200
J	FROM OPENING (DOOR/WINDOW) IN CAR PORT INTO DWELLING	1200
K	VERTICAL FROM A TERMINAL	1500
L	HORIZONTALLY FROM A TERMINAL	300
M	FROM INTERNAL CORNERS	25

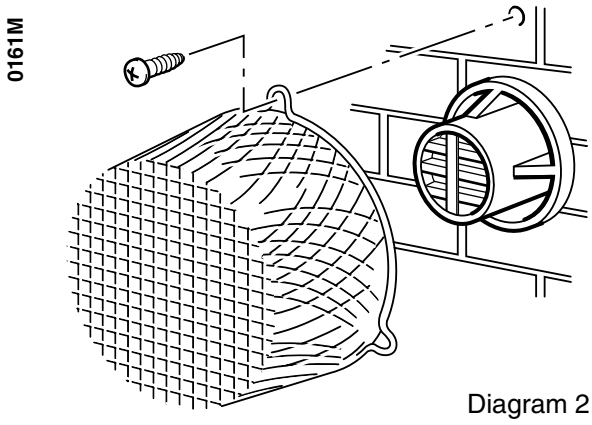

Diagram 2.1

The installation of the boiler must comply with the requirements of the current issue of BS6798, in Ireland, refer also to the current edition of I.S.813 "Domestic Gas Installations".

In GB it is necessary to comply with the Water Supply (Water Fittings) Regulations 1999 (for Scotland, the Water Byelaws 2000, Scotland).

To comply with the Water regulations your attention is drawn to: The Water Regulations guide published by the Water Regulations Advisory Service (WRAS) gives full details of the requirements.

In IE the requirements given in the current edition of I.S.813 "Domestic Gas Installations" and the current Building Regulations must be followed.

3.1 Frost Protection

If the position of the boiler is such that it may be vulnerable to freezing it should be protected as specified in the current issue of BS5422. It is recommended that a frost protection thermostat be fitted.

3.2 Pump

The pump, with integral valves, should be fitted in the heating flow pipework from the boiler, it should be set to produce a temperature difference of 11°C (20°F), between the flow and return, with the boiler thermostat set at “MAX”, which is about 82°C (180°F).

The pressure loss of the boiler can be found from diagram 3.1.

High resistance microbore systems may require a higher duty pump.

3.3 Bypass - Fully Pumped and Sealed Water System

A bypass is usually unnecessary on systems using a 3 port diverter valve since one port will remain in the open position at all times. This allows satisfactory operation of the pump overrun.

However if thermostatic radiator valves are fitted to all radiators or two port valves are used a bypass is required.

The bypass connection must be at least 2 metres away from the boiler.

The flow through the boiler must not be allowed to fall such that there is a temperature difference greater than 20°C between the flow and return.

3.4 Water System

For an open vented system the boiler must be supplied from an unrestricted water supply taken from a feed and expansion cistern fitted at a maximum height of 27metres above the boiler.

The cold feed must be 15mm minimum size.

It is important that the relative positions of the pump, cold feed and open vent are as shown in diagram 3.2.

The unrestricted open vent from the boiler must rise continuously to discharge over the feed and expansion cistern.

3.5 Domestic Hot Water System

General - All domestic hot water circuits, connections, fittings must be in accordance with the relevant standards and water supply regulations.

For GB: Guidance G17 to G24 and recommendation R17 to R24 of the Water Regulations Guide.

For IE: The current edition of I.S.813 "Domestic Gas Installations".

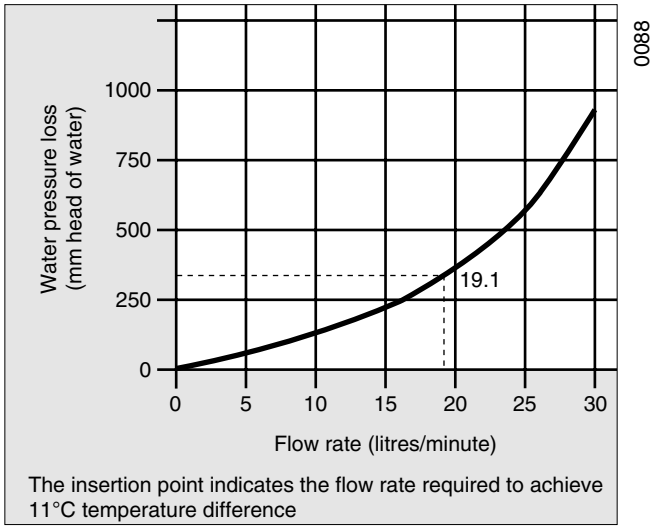

Diagram 3.1

The domestic hot water service must be in accordance with the current issue of BS5546, refer also to the current issue of BS6700.

3.6 Cylinder

For all systems supplying domestic hot water the cylinder must be indirect. It is recommended that the cylinder be fitted with some form of temperature control.

3.7 Gravity Domestic Hot Water with Pumped Heating

IMPORTANT: If domestic hot water is to be provided by a gravity circulation to the cylinder the blanked off connections must be opened and used, using 22x28mm connections, see diagram 3.3.

3.8 Fully Pumped Heating and Domestic Hot Water

The connections for this type of system MUST be as shown in diagram 3.2 and 3.4.

3.9 Inhibitor

Attention is drawn to the current issue of BS5449 and BS7593 on the use of inhibitors in central heating systems.

If an inhibitor is to be used, contact a manufacturer or Saunier Duval., for their recommendations as to the best product to use.

When installing in an existing system take special care to drain the entire system, including radiators, then thoroughly cleaning out before installing the boiler whether or not adding an inhibitor.

3.10 Sealed Water Systems

The installation should comply with the appropriate requirements of the current issue of BS4814, BS5449, BS6759, BS6798 and BS7074 Part 1 and 2, see diagram 3.5 for a suggested layout.

3.11 Safety Valve

A safety valve must be fitted to a sealed water system.

It shall be preset, nonadjustable with a lift pressure of 3bar, incorporating seating of a resilient material, a test device and a connection for drain.

The drain from the safety valve must be routed clear of any electrical fittings and positioned so that any discharge can be seen.

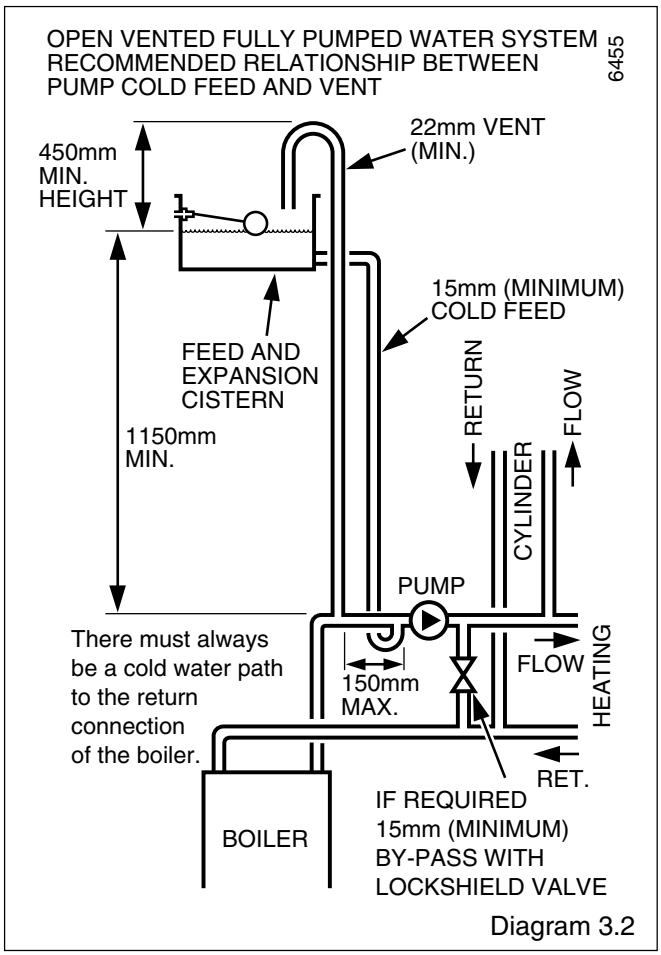

Diagram 3.2

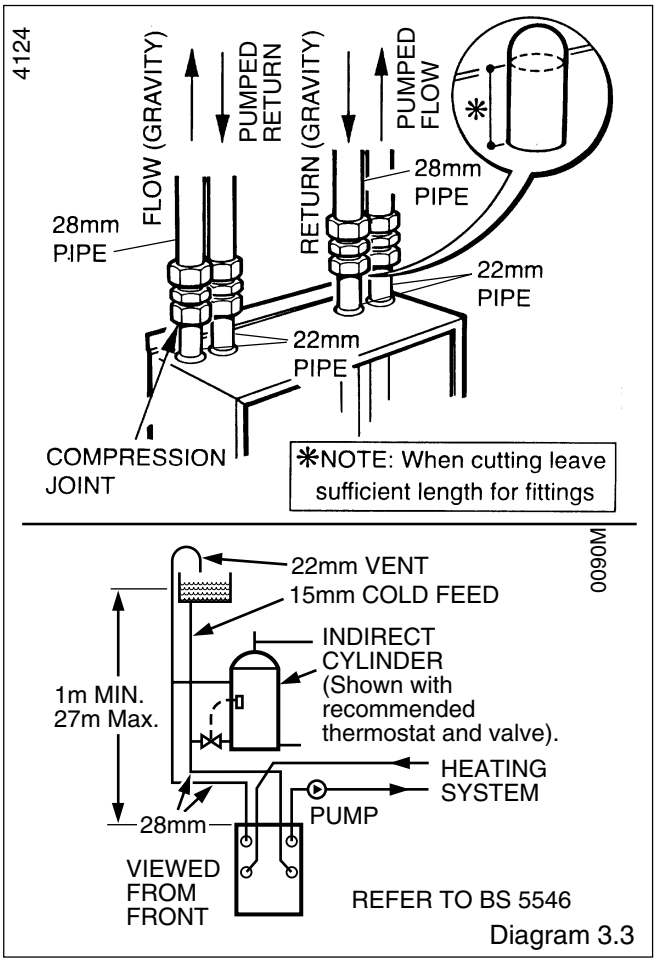

Diagram 3.3

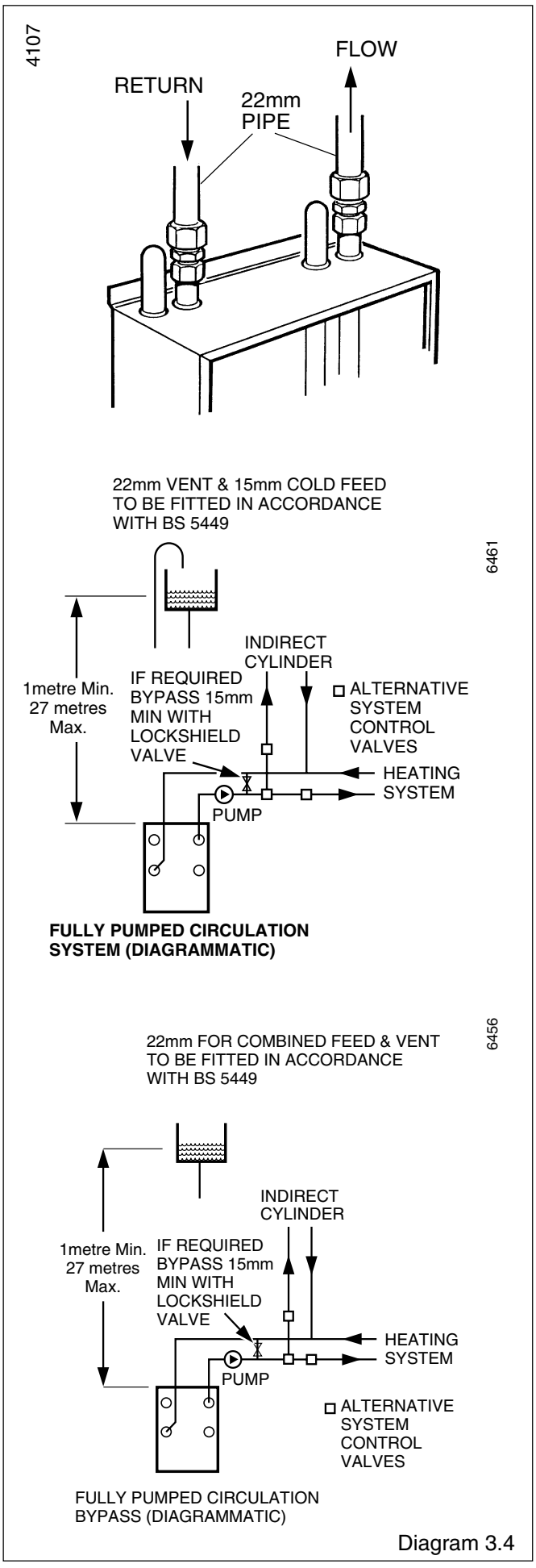

Diagram 3.4

3.12 Expansion Vessel

A diaphragm type expansion vessel, conforming to the current issue of BS4814 (see also BS7074 Part 1 and 2) must be connected at a point close to the inlet side of the circulating pump, see diagram 3.5 unless laid down differently by the manufacturer.

The expansion vessel volume depends upon the total water system volume and the initial system design pressure. For any system an accurate calculation of vessel size is given in the current issue of BS5449 and BS7074 Part 1, for IE refer to the current edition of I.S.813 "Domestic Gas Installations".

Example: For an initial system design pressure of 0.7bar the minimum total vessel volume required is 0.063xTotal System volume.

NOTE: A higher initial design pressure requires a larger volume expansion vessel.

The charge pressure must not be less than the static head of the system, that is, the height of the highest point of the system above the expansion vessel.

The water content of the boiler is given in Data Table 1.

3.13 Pressure Gauge

A pressure gauge with a set pointer and covering at least the range of 0 to 4bar (0 to 60lb/in^2) shall be permanently fitted to the system in a position where it can be seen when filling the system.

3.14 Domestic Hot Water Cylinder

SINGLE FEED INDIRECT CYLINDERS ARE NOT SUITABLE.

The domestic hot water cylinder must be of the indirect coil type. It must be suitable for working at a gauge pressure of 0.35bar above the safety valve setting.

3.15 Domestic Hot Water System - Unvented

Where a storage system will not have a vent to atmosphere the installation must comply with Building Regulations and local Water Company Bye-laws, see also the current issue of BS6700.

If fitting into an existing system the local authority must also be advised.

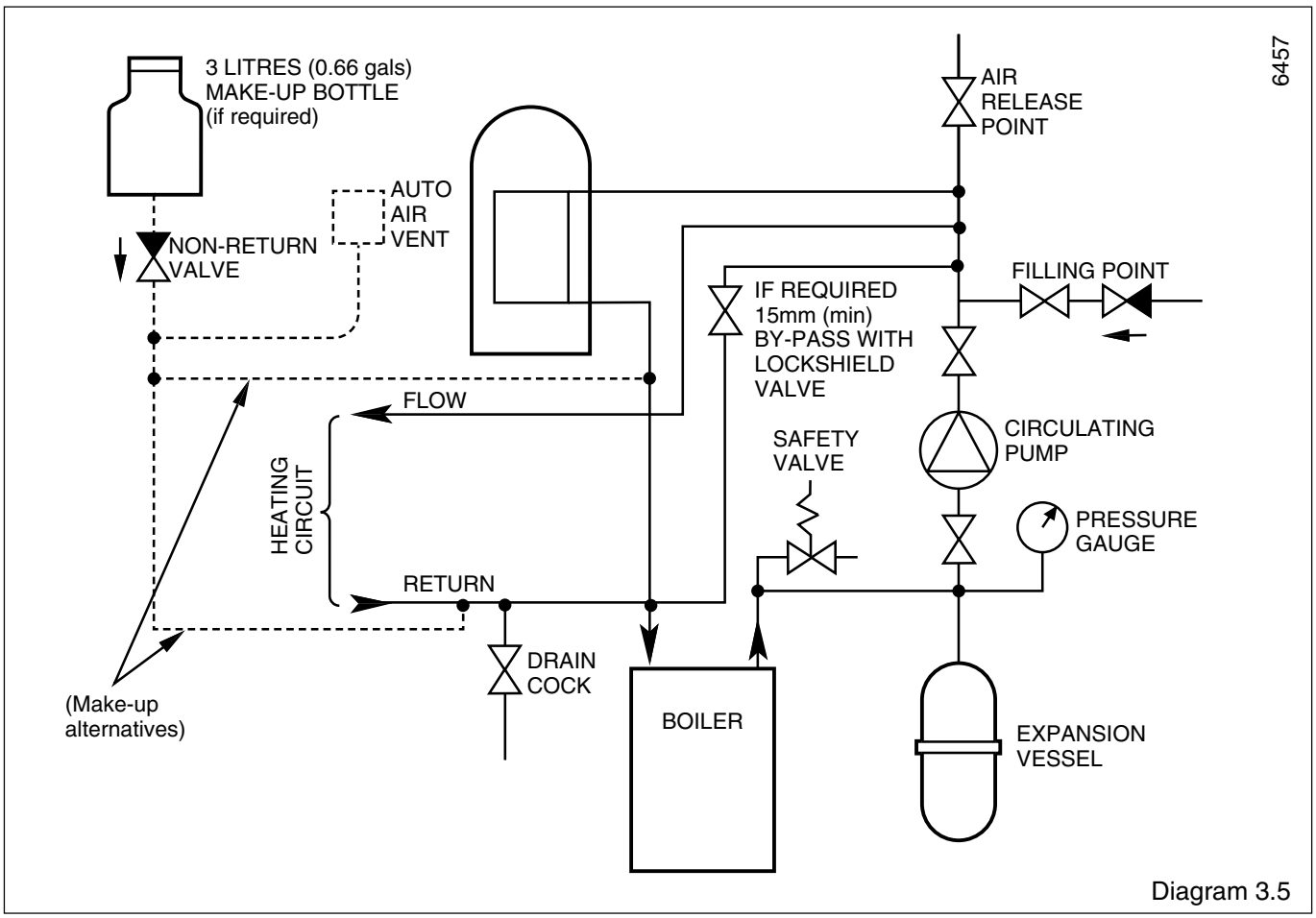

Diagram 3.5

3.16 Filling a Sealed Water System

Provision for filling the system at low level must be made. Three methods are shown in diagram 3.6. There must be no permanent connection to the mains water supply, even through a non-return valve.

3.17 Water Makeup

Provision must be made for replacing water lost from the system. A make up vessel mounted above the highest point of the system and connected through a non-return valve to the system on the return side of either the hot water cylinder or heating system, see diagram 3.5.

Alternatively provision for make up can be made by a filling loop.

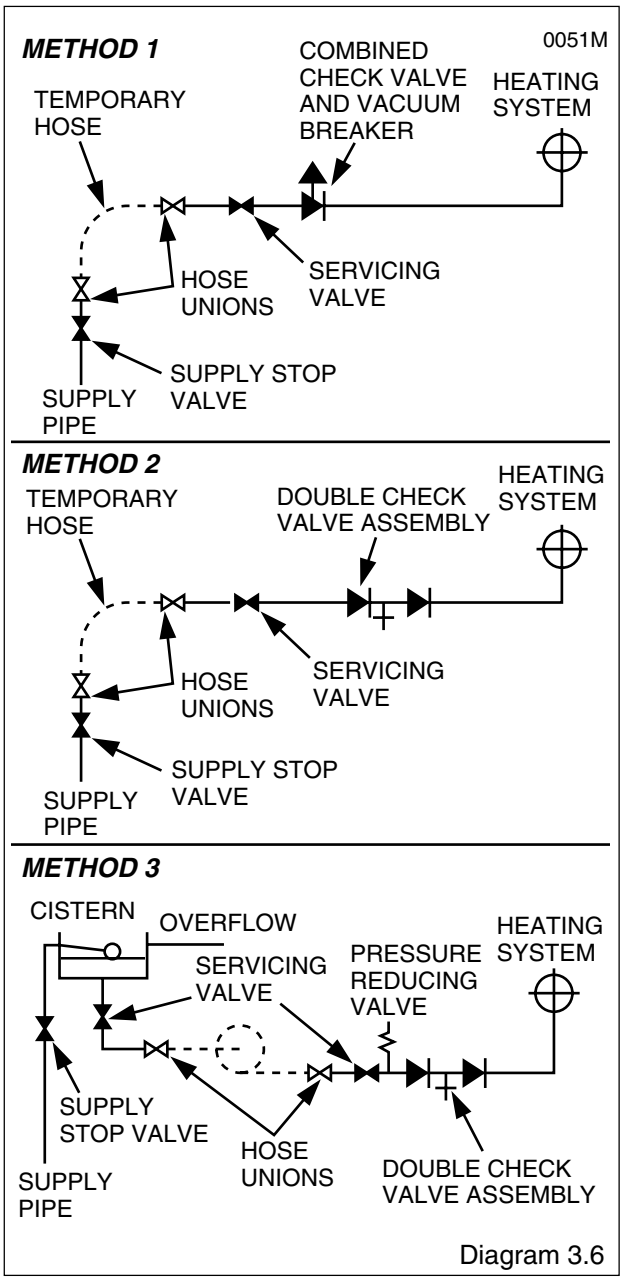

Diagram 3.6

4 Flue and Appliance Preparation

4.1 Unpacking

Open the carton, check the items supplied against the boiler pack contents list on the flap and diagram 4.1.

4.2 Flue Position and Length

Determine flue application, length and terminal position before starting.

Refer to diagram 4.2 or 4.3.

If you are using a Flue Bend or a Vertical Flue Kit, please follow the instructions supplied with that kit.

To make a neat finish to the flue outlet a flue collar kit, part No.459248, with instructions, is available.

NOTE: The use of this collar will mean that the flue lengths will need to be altered, full instructions are given in the kit.

NOTE: If required, an optional Wall Sleeve Kit, part No.900864, is available, complete with fixing instructions.

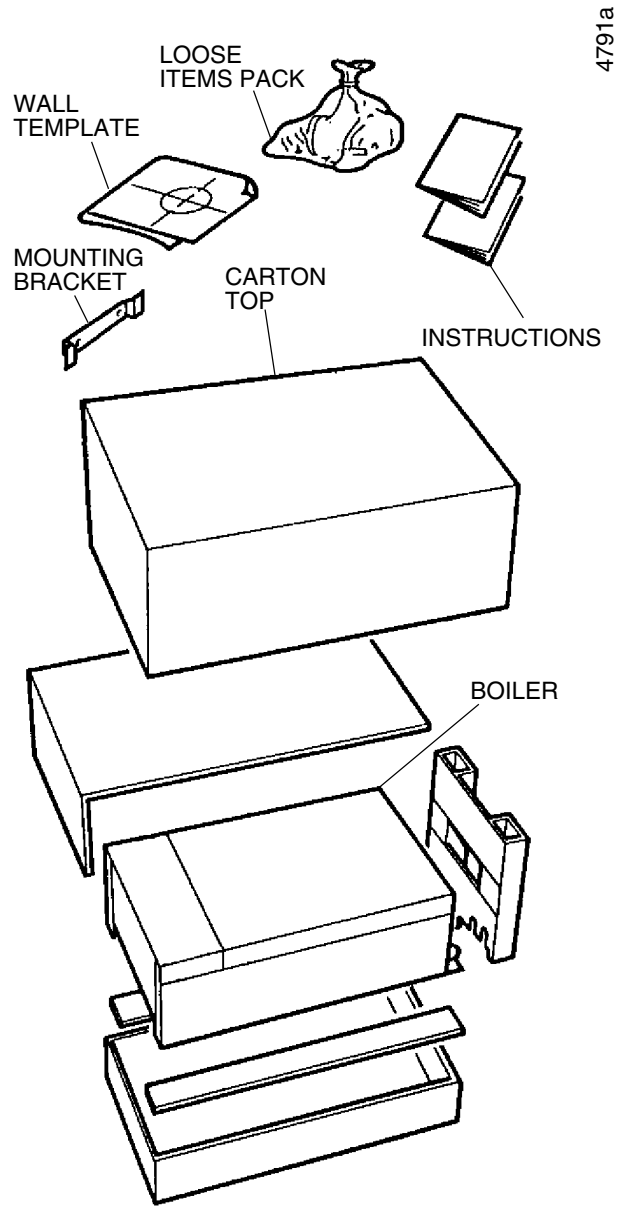

Diagram 4.1

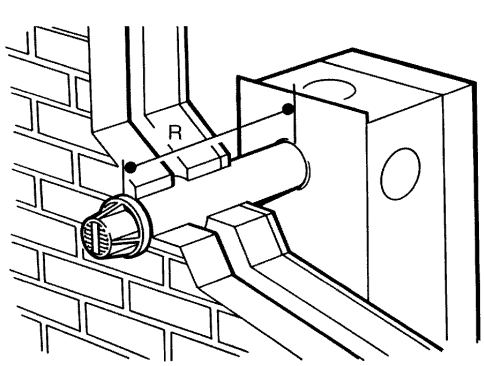

Standard Flue terminal illustrated.

REAR FLUE LENGTHS	
Distance R = Wall thickness	
STD.	75mm to 505mm
1M	75mm to 1015mm
2M	75mm to 2015mm
3M	75mm to 2995mm

Diagram 4.2

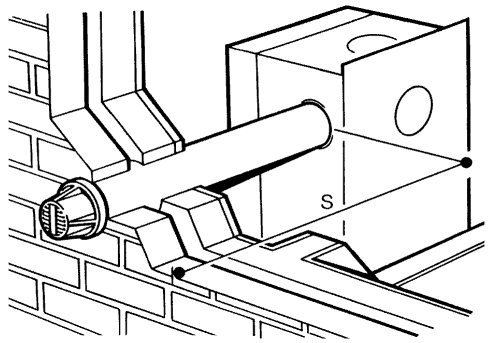

Standard Flue terminal illustrated.

SIDE FLUE LENGTHS	
Distance S = External wall face to boiler case	
STD.	81mm to 513mm
1M	81mm to 1023mm
2M	81mm to 2023mm
3M	81mm to 3003mm

Diagram 4.3

4.3 Flue Preparation

All flue assemblies are designed for internal installation (optional wall liner is required), given that there is sufficient clearances opposite to the flue for the installation of the flue.

If there is insufficient clearance the flue can be installed from outside.

For a wall thickness up to 300mm, provided that there is sufficient space and the optional wall liner kit is used the flue can be fully installed from the inside.

For a wall thickness of over 300mm the external flue hole will need to be made good from the outside. This applies also if you use the flue kit without the optional kit, irrespective of wall thickness.

4.4 Rear and Side Flue Application

Select the boiler location and flue application, with due regard to the terminal position.

Take the template from the boiler pack and temporarily position it on the wall, making sure that the minimum clearances are maintained, see diagram 1.2.

For a rear flue mark the position of the flue as diagram 4.4.

For a side flue, extend the centre line horizontally left or right to the corner of the adjacent surface where the flue is required to exit to outside. Mark the position of the centre of the flue and boiler, as diagram 4.4.

4.5 Flue Hole Cutting

Having marked out the flue centre cut a hole for the flue using, preferably, a 115mm minimum core drill.

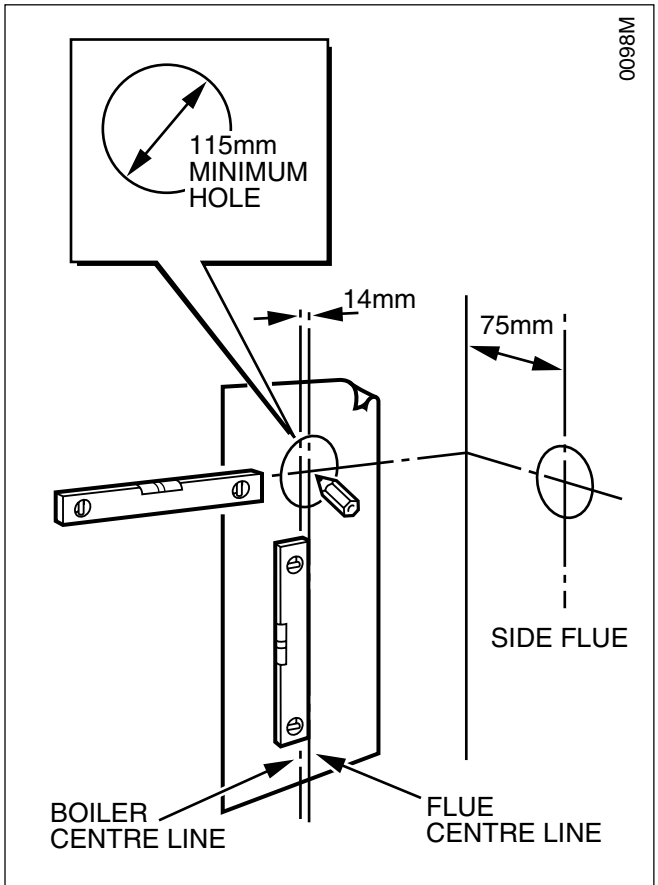

REAR FLUE Diagram 4.4

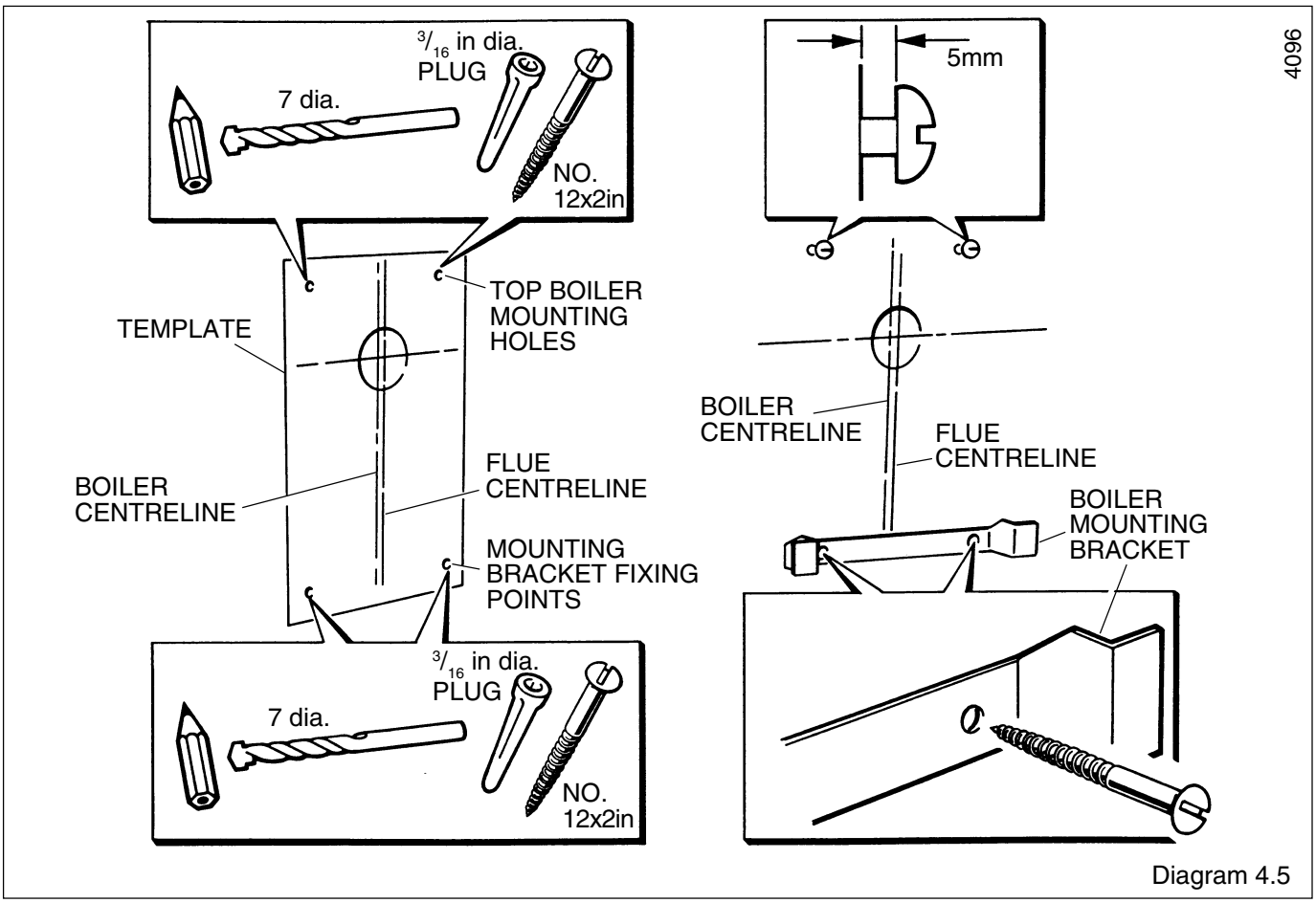

Diagram 4.5

4.6 Wall Mounting Bracket

Reposition the template, making sure of dimensional alignment with the flue hole.

Mark the boiler fixing points and mounting bracket position, see diagram 4.5.

Drill holes and plug, to suit No.12x2in wood screws, fit the screws allowing sufficient clearance, about 5mm, to accept the swing brackets, see diagram 4.5.

Secure the mounting bracket to the wall with No.12x2in wood screws and plugs, see diagram 4.5.

4.7 Flue Duct

Mark the duct to the length required, this length allows for expansion, see diagram 4.6 for rear flue and diagram 4.7 for side flue, then cut square and remove any burrs.

4.8 Air Duct/Terminal

Mark the duct length, see diagram 4.8 for rear flue and diagram 4.9 for side flue, then cut square and remove any burrs.

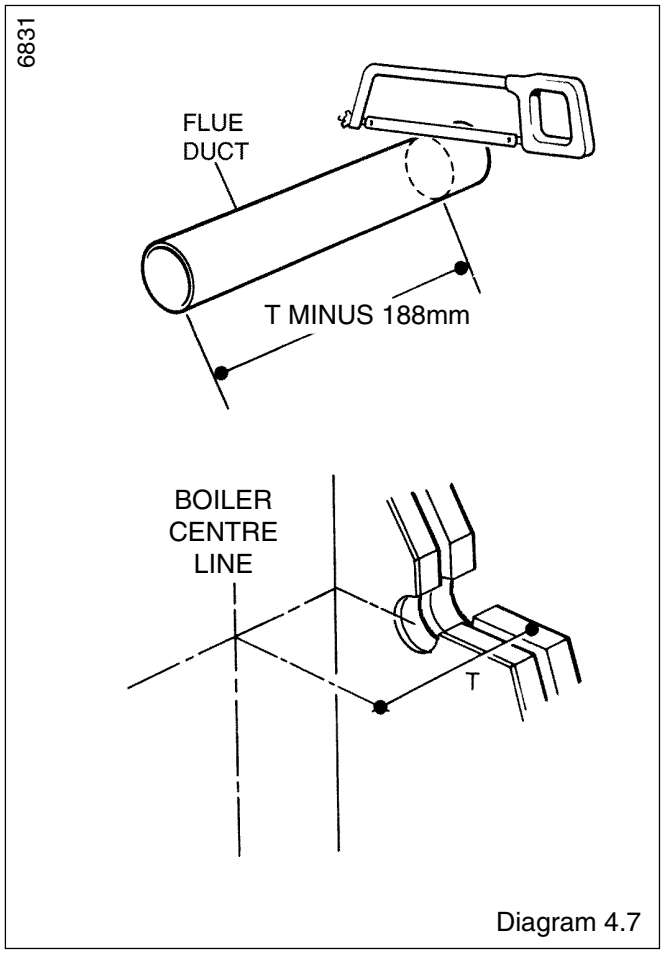

Diagram 4.7

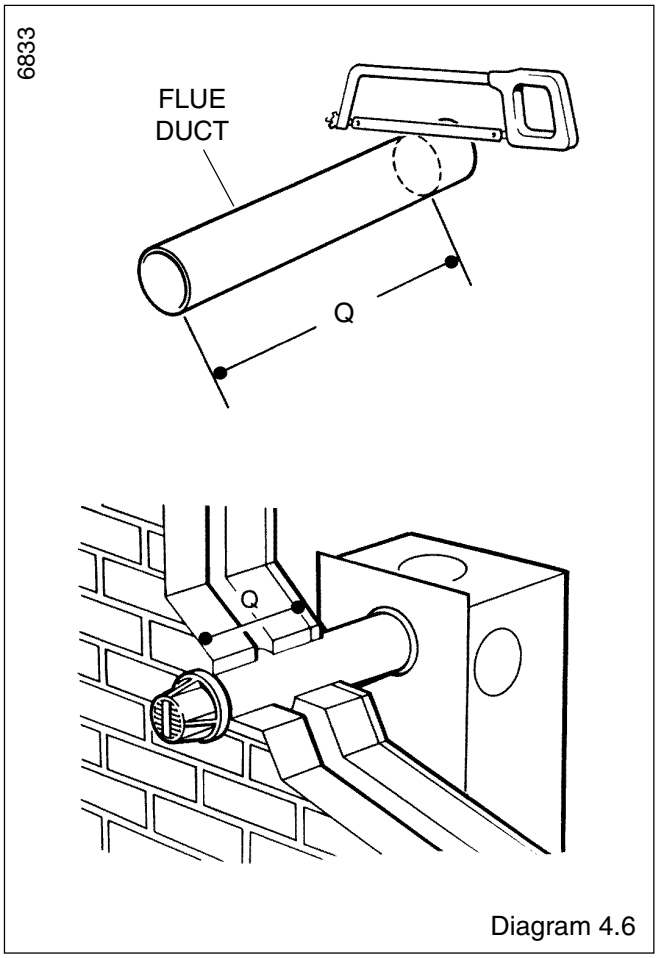

Diagram 4.6

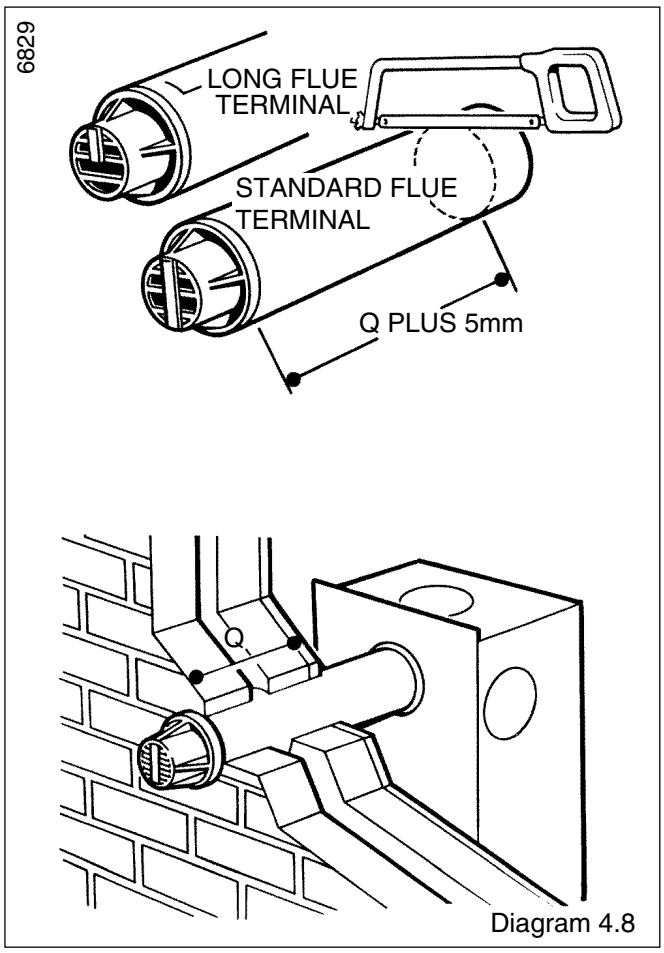

Diagram 4.8

4.9 Air Duct/Terminal and Flue Duct Assembly

Locate the flue duct into the air duct/terminal, see diagram 4.10.

Take the flue manifold from the loose items pack together with the sealant. Place the sealant onto the flue manifold.

Fully locate the flue manifold in to the air duct/terminal and flue duct assembly as shown in diagram 4.10, make sure the correct alignment of the “Top”s.

Drill two 3mm diameter holes through the air duct/terminal to the flue manifold secure with the two self tapping screws supplied in the loose items pack.

It should now not be possible to remove the manifold.

4.10 Rear Fitting

Fit the self adhesive foam seal provided in the flue pack around the air duct/terminal at the position shown in diagram 4.13.

4.11 Side Fitting

Fit the self adhesive foam seal around the air duct/terminal such that, when installed, the seal will be within the wall, see diagram 4.14.

If dimension "A" is greater than 75mm from the wall, the self adhesive foam seal can be dispensed with, and the area around the flue made good in the normal way, see diagram 4.14.

IMPORTANT: If the wall liner kit is used the self adhesive foam seal included in the wall liner kit must be used in place of the one supplied with the flue pack, see diagram 4.11 for position of self adhesive seal.

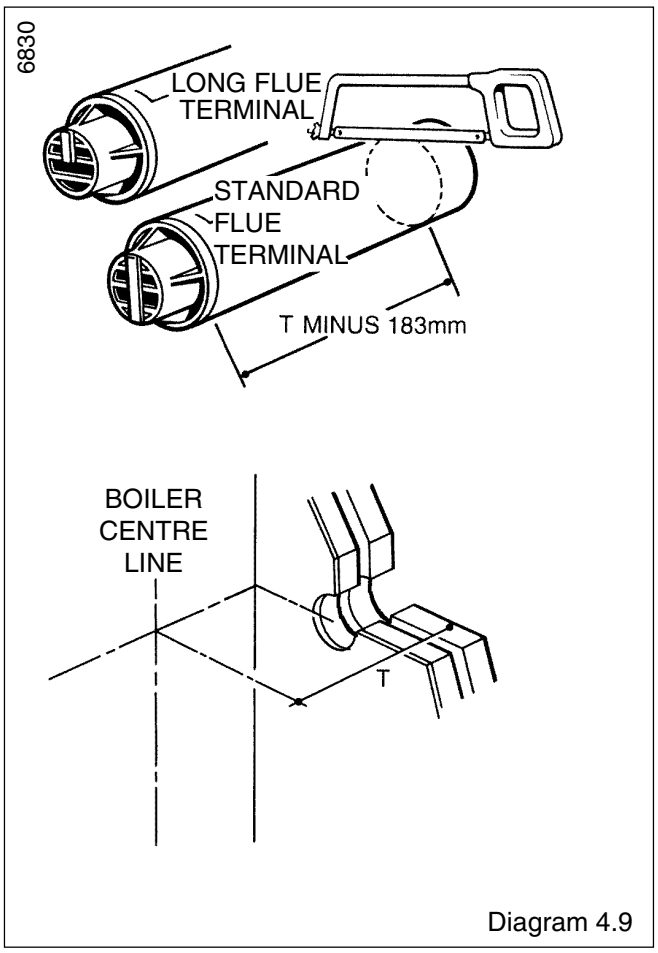

Diagram 4.9

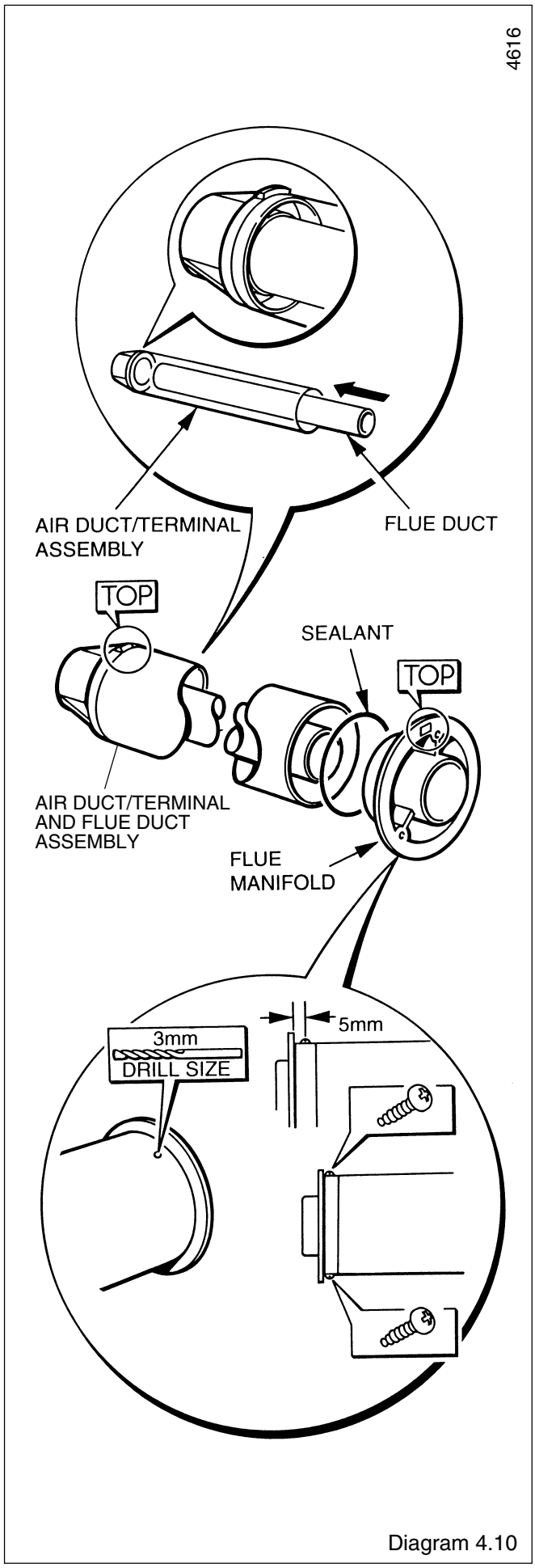

Diagram 4.10

4.12 Flue Assembly - Installation

If the boiler is not to be fitted for some time cover the hole in the wall.

On limited access installations push the flue assembly into the hole such that it is within the wall and does not stick out into the room, see diagram 4.12. Do not push the flue assembly too far into the hole as it has to be pulled back into the boiler and secured.

4.13 Internal Access Flue

If access to the outside wall is not practical, the flue system can be installed from inside. Use of the optional wall liner kit is required.

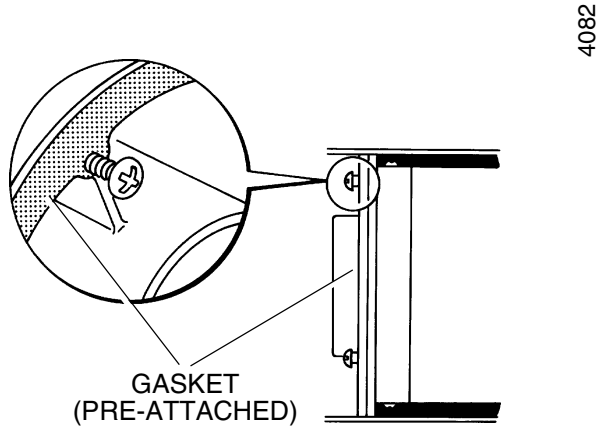

Diagram 4.12

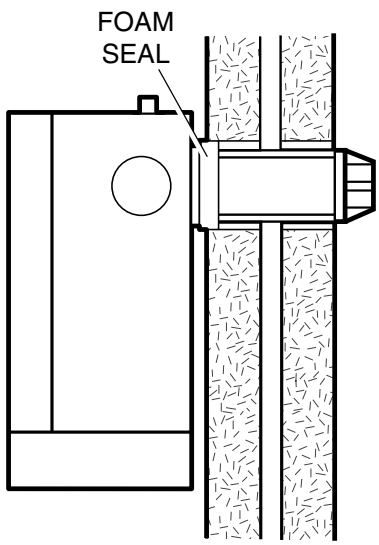

REAR FITTING Diagram 4.13

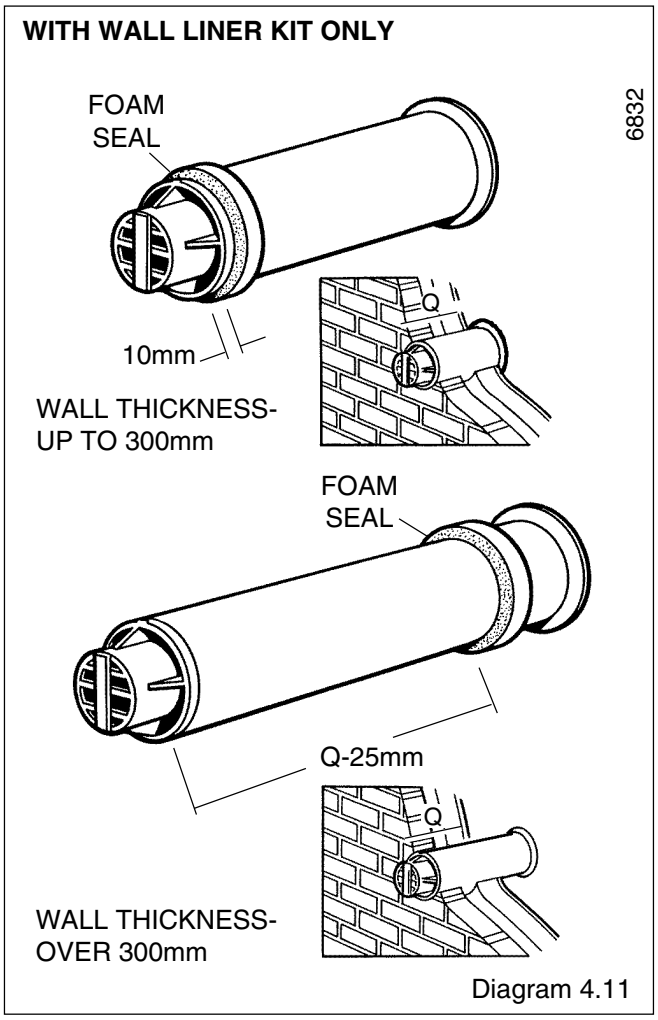

Diagram 4.11

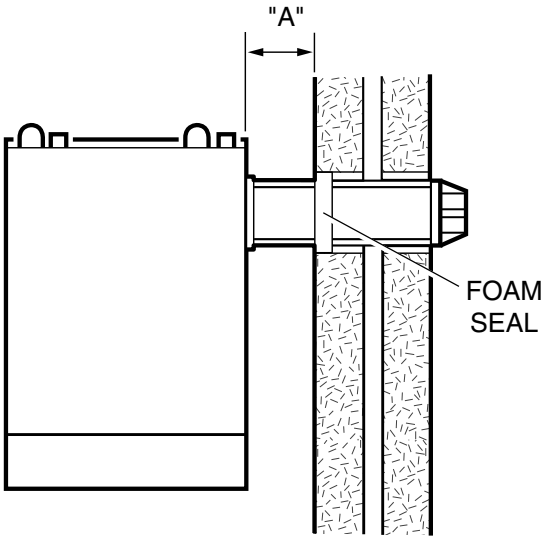

SIDE FITTING Diagram 4.14

5.1 Boiler Preparation

With the boiler still in the bottom tray, slide the controls cover upward and remove it as shown in diagram 5.1.

Remove the front cover by undoing the wing nut, nut and washer, lift the front cover off, see diagram 5.1.

Place front cover on one side until required.

Fit suitable compression fittings to the required tappings on the boiler.

NOTE: For gravity domestic hot water use 22x28mm connections on the stubs, see diagram 5.2.

5.2 Mounting the Boiler

As necessary, fit the blanking plate, see diagram 5.5.

Now make sure that the top, swing brackets are UPRIGHT.

IMPORTANT: With regards to the Manual Handling Operations, 1992 Regulations, the following operation, exceeds the recommended weight for one man lift.

Lift the boiler into position, hooking over the mounting bracket.

Swing the brackets over the two screws at the top. Hold the swing bracket(s) in place whilst tightening the screw(s) onto it, see diagram 5.3.

Remove the blue and red electrical connections from the fan, see diagram 5.4.

Break the air pressure switch tube connections, see diagram 5.4.

Remove the fan assembly by removing the screws at the front, slackening the screws at the rear and sliding it out, see diagram 5.4.

Taking care not to damage the gasket, secure the flue assembly to the boiler using the previously fitted dogpoint screws noting that these are keyhole fixings, see diagram 5.5.

Make sure of the correct fitting of the flue to the boiler.

For a side outlet cut the fan duct extension to the length required, see diagram 5.6.

Remove any burrs and fit as diagram 5.6.

Fit the fan duct extension to the elbow and assemble to the fan as shown in diagram 5.6.

Do not secure at this point with the screw.

Position the fan assembly and engage the fan duct extension over the flue manifold. Make sure, by pushing the flue duct extension that a secure seal is made.

Mark the final position of the fan duct extension through the screw hole on the elbow, remove the assembly and secure with the screw as diagram 5.6.

Secure the elbow to the fan outlet with the Jubilee clip.

For rear outlet cut and fit the fan duct extension, as diagram 5.6. Secure with the Jubilee clip.

Fit fan assembly by engaging the fan duct extension over the flue manifold spigot, see diagram 5.7.

Secure the fan assembly with the screws previously slackened and removed.

Reconnect the blue and red electrical connections to the fan, the polarity of the connections is not important.

Reconnect the air pressure switch tubes as shown in diagram 5.4.

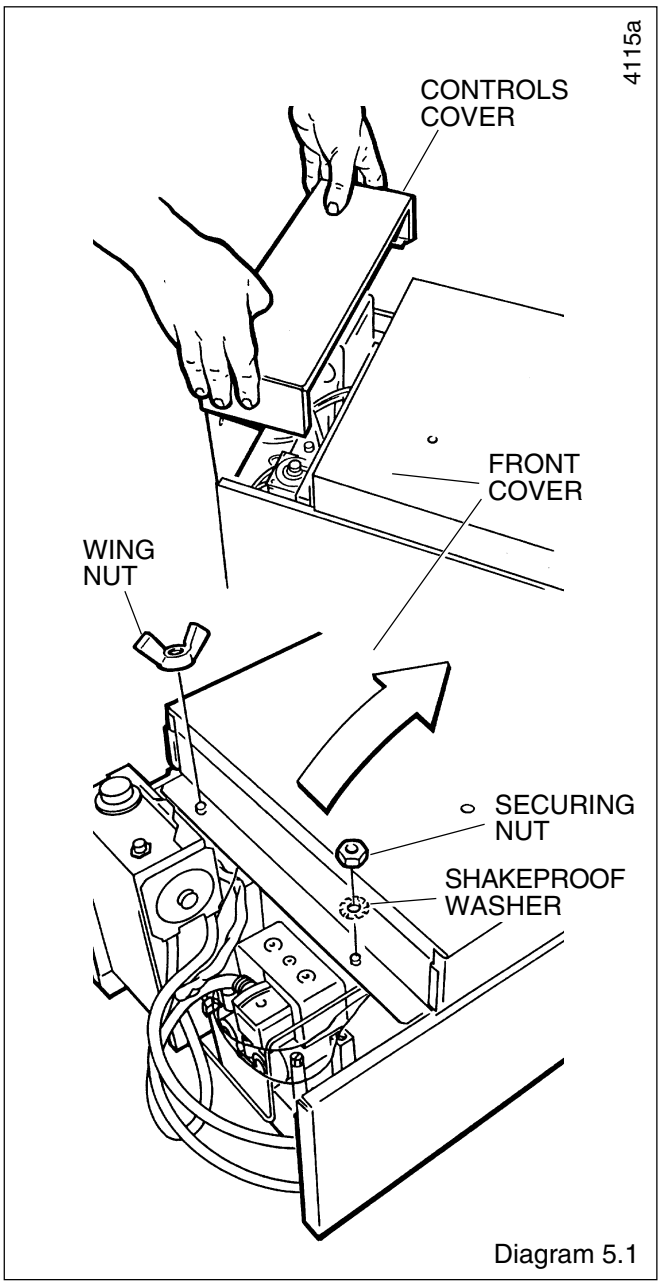

Diagram 5.1

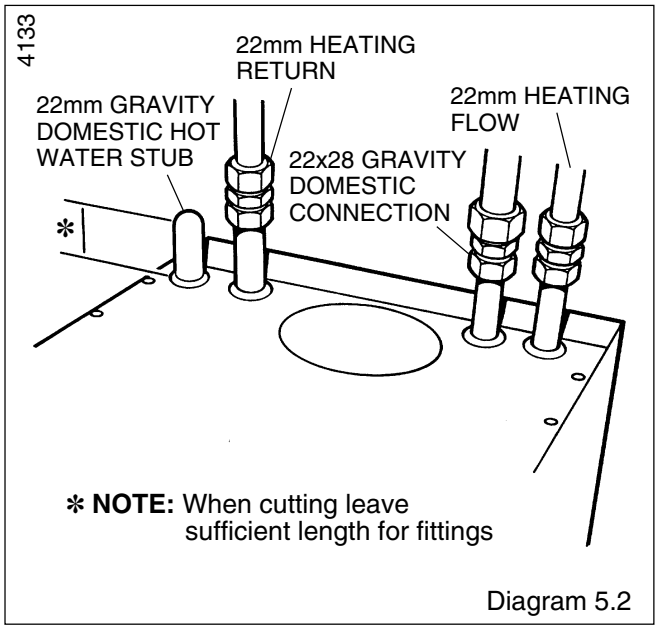

Diagram 5.2

5.3 Water Circulation System

Complete the water connections to the boiler.

Fill, vent and flush the system.

Check for any water leaks and put right.

5.4 Safety Valve Discharge

Fit a suitable discharge pipe to the safety valve and route it to outside the building so that any discharge can be seen but will not cause injury to persons, damage to property or any electrical installation.

5.5 Gas Connection

Make the gas connection to the Rc$^1/_2$in gas service cock, see diagram 6.1.

Check for leaks using a suitable leak detection fluid.

The whole of the gas installation, including the meter, should be inspected, tested for soundness and purged in accordance with the current issue of BS6891 and in IE the current edition of I.S. 813 "Domestic Gas Installations".

5.6 Control Box Removal

Remove the electrical control box securing screws, see diagram 5.8. Slide the box forwards and release, hook it onto the lip bracket at the front, see diagram 5.8.

5.7 Electrical Connection

WARNING: This boiler must be earthed.

Take care not to damage any internal wiring and capillaries.

Take the plastic cable retaining clip, from the loose items pack, peel off the backing paper and position it in a suitable place to secure the incoming cable.

Using heat resistant (85°C) cable of at least 0.75mm^2 (24/0.2mm) to the current issue of BS6500 Table 16 and of a suitable length, thread through the cable clamps, secure into the plastic clips and connect to appropriate terminals, see relevant diagram 5.9 or 5.10.

Standard colours are, brown - live (L), blue - neutral (N) and green and yellow - earth (E).

The mains cable outer insulation must not be cut back external to the cable clamp.

Make sure the cable is suitably secured.

When making connections, make sure that the earth conductor is made of a greater length than the current carrying conductors, so that if the cable is strained the earth conductor would be the last to become disconnected.

5.8 Gravity Domestic Hot Water Systems

Fit the yellow link cable, supplied in the fittings pack, between terminal K1 and K2, see diagram 5.9.

5.9 Pump Connection

FULLY PUMPED

The pump must be connected directly to the control box, as shown in diagram 5.10 threading the cable through the cable clamp in the side of the control box.

PUMPED HEATING AND GRAVITY DOMESTIC HOT WATER

The pump must be wired into the central heating remote controls.

Make sure that the supply cable and all external cables are secured and away from hot surfaces.

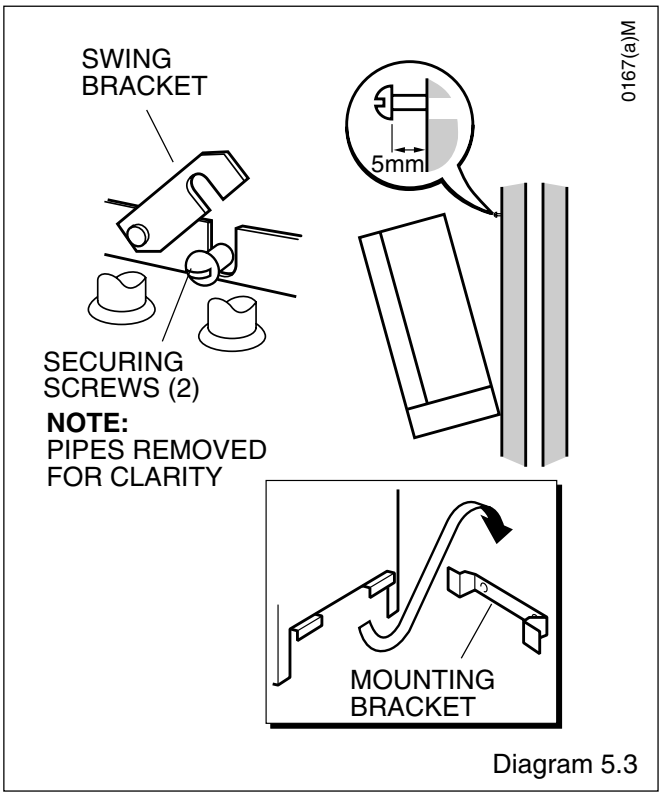

Diagram 5.3

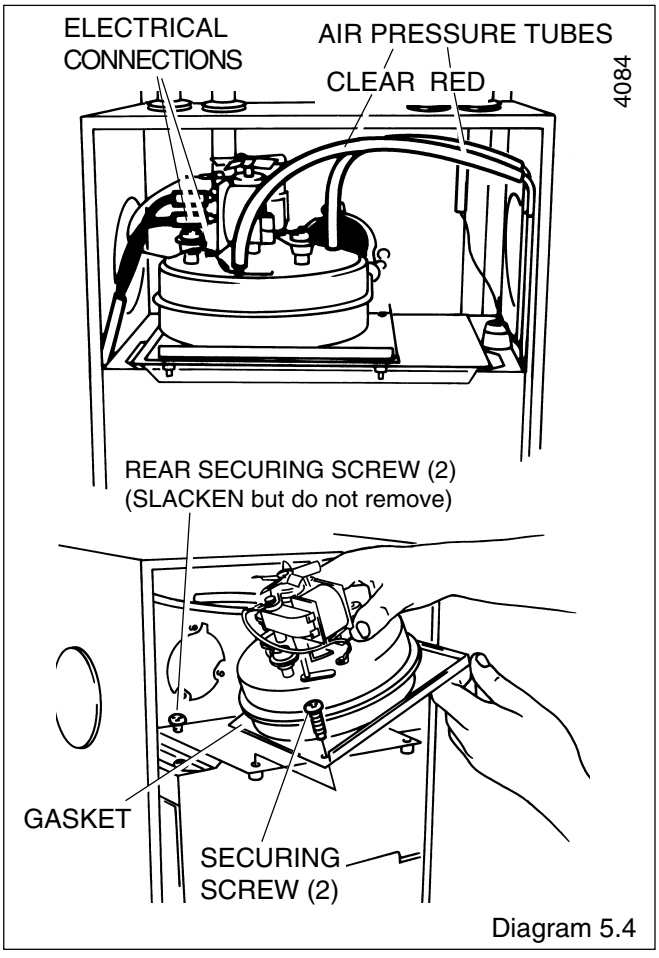

Diagram 5.4

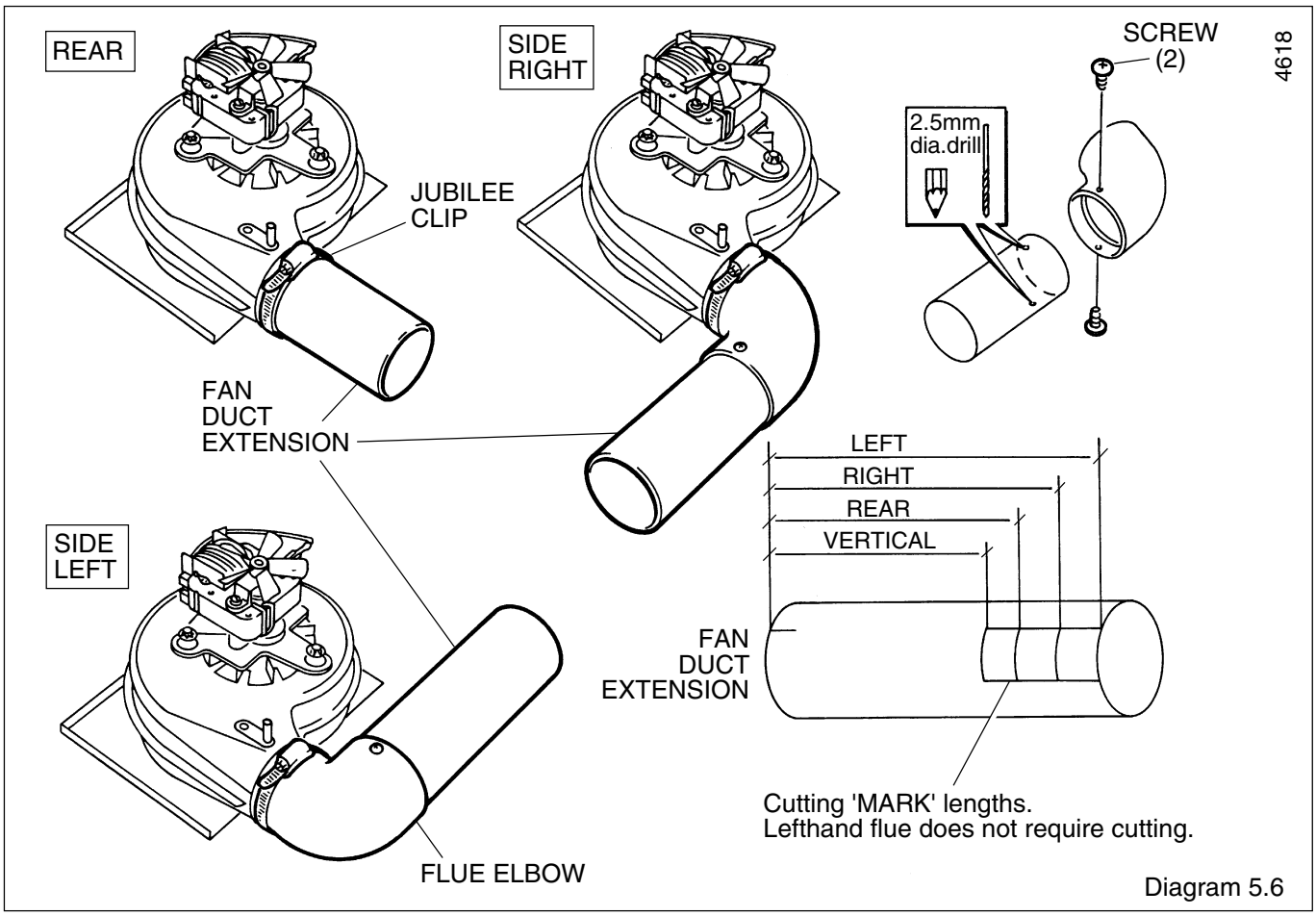

Diagram 5.6

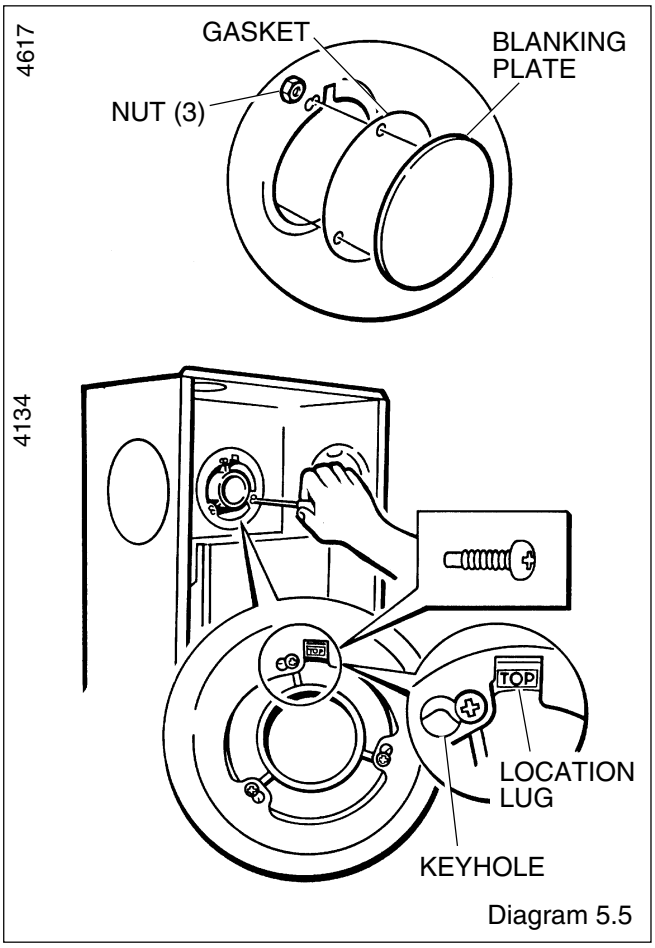

Diagram 5.5

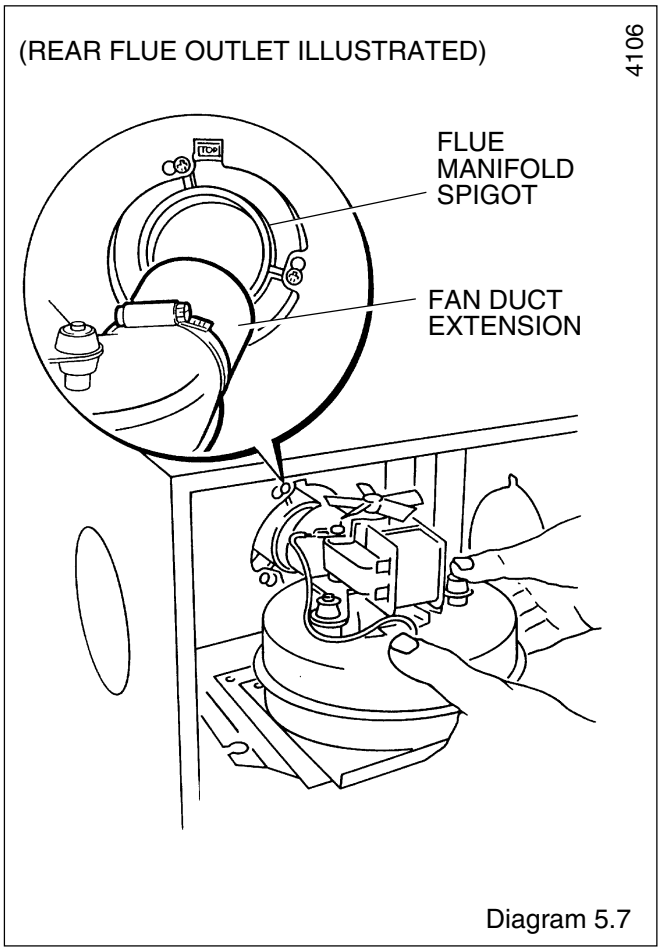

Diagram 5.7

5.10 External Controls

Make sure that the supply cable and all external cables are secured and away from hot surfaces.

GRAVITY DOMESTIC HOT WATER AND PUMPED CENTRAL HEATING, SEE DIAGRAM 5.9.

FULLY PUMPED OPEN VENTED OR SEALED WATER SYSTEMS, SEE DIAGRAM 5.10.

5.11 Testing

Checks to ensure electrical safety must be carried out by a **competent person**.

After installation of the system, preliminary electrical system checks as below should be carried out:-

1. Test insulation resistance to earth.
2. Test earth continuity and short circuit of all cables.
3. Test the polarity of the mains.

The installer is requested to advise and give guidance to the user on the controls scheme used with the boiler.

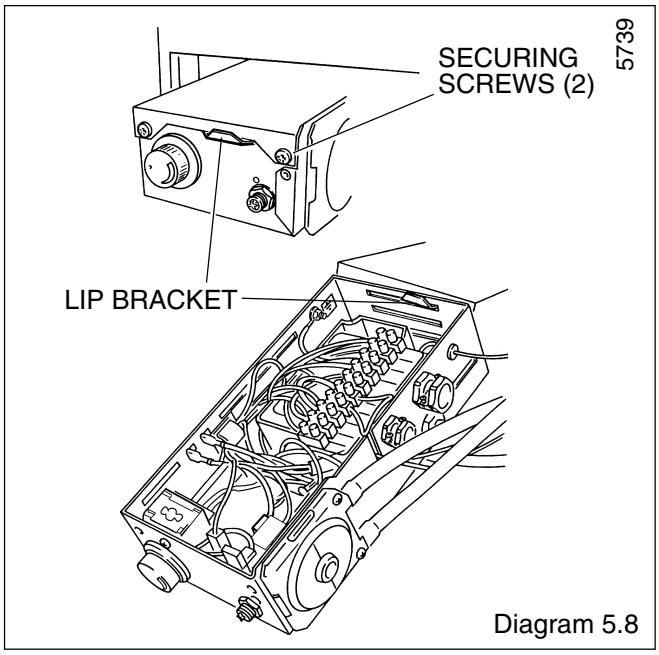

Diagram 5.8

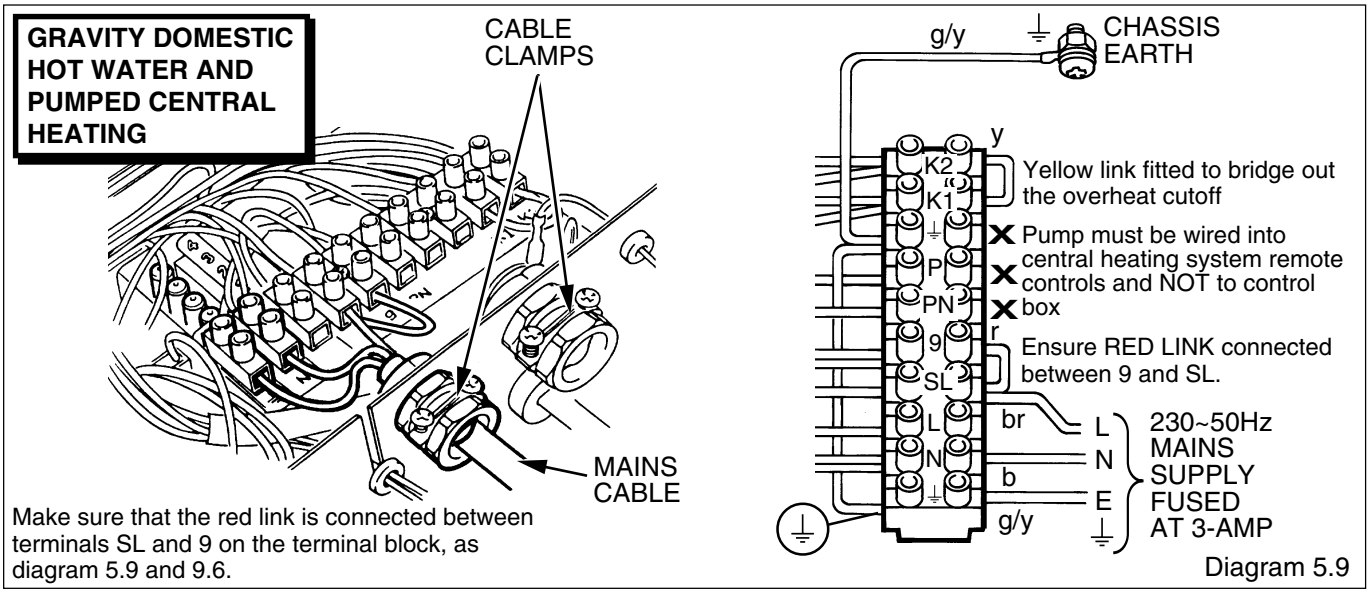

Make sure that the red link is connected between terminals SL and 9 on the terminal block, as diagram 5.9 and 9.6.

Diagram 5.9

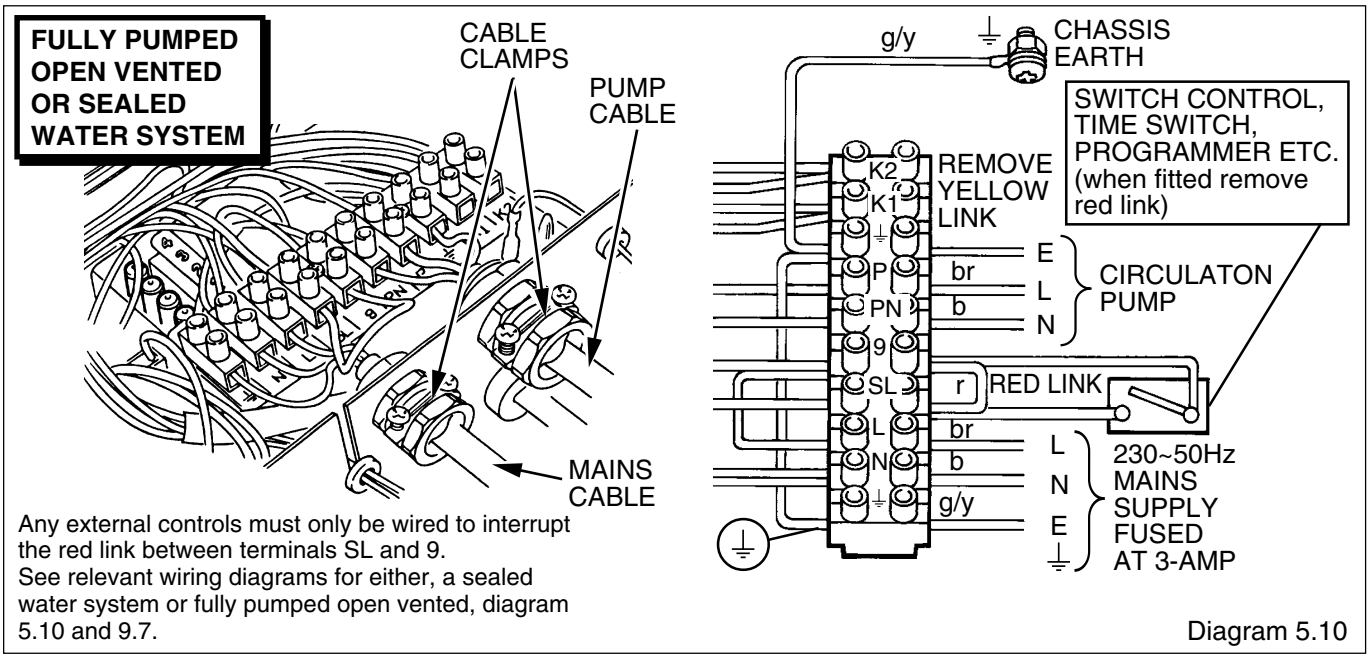

Any external controls must only be wired to interrupt the red link between terminals SL and 9.
See relevant wiring diagrams for either, a sealed water system or fully pumped open vented, diagram 5.10 and 9.7.

Diagram 5.10

Please ensure the “Benchmark” logbook is completed and left with the user.

6.1 All Systems

Commissioning should be carried out by a **competent person** in accordance with the current issue of BS6798.

Do not operate the boiler without water.

Make sure that the system has been thoroughly flushed out with cold water without the pump in place.

Refit the pump, fill the system with water, ensuring that all the air is properly vented from the system and pump.

Before operating the boiler check that all external controls are calling for heat.

6.2 Sealed Water Systems Only

Flush the whole system with cold water without the pump in place. Refit the pump and fill until the pressure gauge registers 2.7bar (40lbf/in^2). Clear any air locks and check for water soundness.

Check the operation of the safety valve, by allowing the water pressure to rise until the valve opens. The valve should open within +/- 0.3bar (+/- 4.3lbf/in^2) of the preset pressure. Where this is not possible conduct a manual check and test.

Release cold water to initial system design pressure.

The set pointer on the pressure gauge should be set to coincide with the indicating pointer.

6.3 Initial Lighting and Testing

CAUTION: This work must be carried out by a **competent person**, in accordance with the current issue of BS6798.

Make sure that all naked lights and cigarettes are out.

Identify the controls by reference to diagram 6.1.

Check that the boiler is isolated from the electrical supply.

Makes sure that the control thermostat is turned to “O” the “Off” position.

Turn the gas service cock “On”, see diagram 6.1.

Test the pilot supply tube and its connections for gas soundness as follows:

Disconnect the ignition lead from the PCB, see diagram 5.9.

Remove the combustion chamber front, see diagram 6.3.

WARNING: The fan operates on mains voltage, terminals will become live.

Turn the electrical supply on and check that all remote controls are calling for heat.

Check that the pump is circulating water through the system.

To complete the test it is necessary to operate the boiler without its case, but **UNDER ALL OTHER CIRCUMSTANCES** the case must be correctly fitted and sealed.

Turn the control thermostat knob fully clockwise and the fan will work.

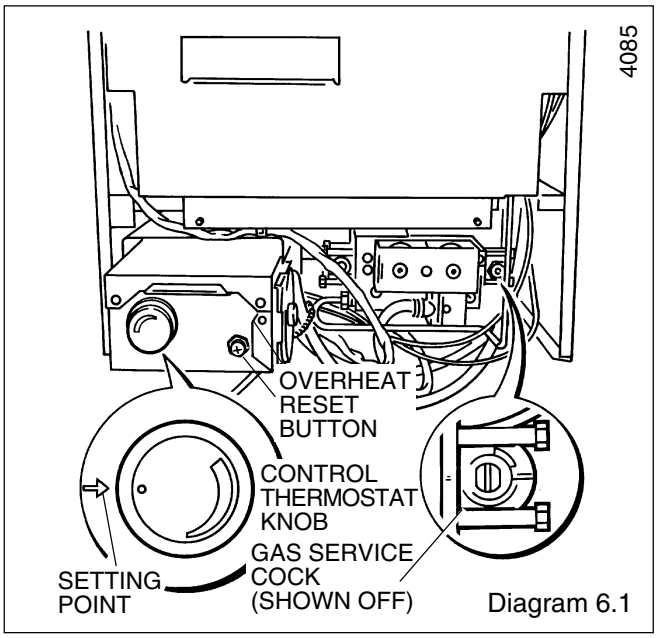

Diagram 6.1

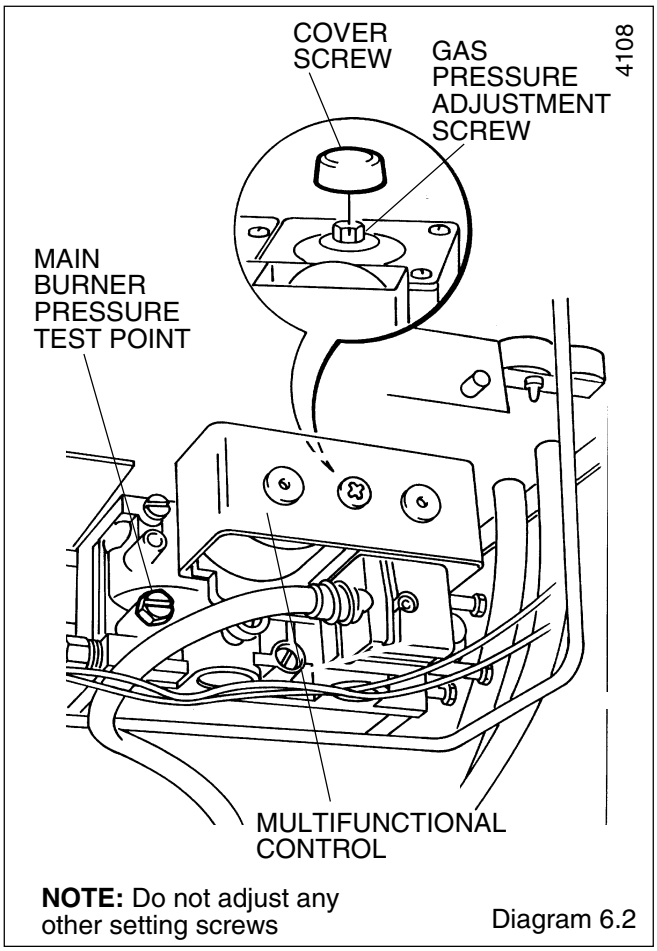

NOTE: Do not adjust any other setting screws

Diagram 6.2

NOTE: There will be no sparks at the pilot. Take care and light the pilot with a match.

Test the pilot supply and connections for gas soundness, using a suitable leak detection fluid.

Very cold weather may delay the operating sequence.

The pilot rate is preset and must not be adjusted.The step adjustment screw must not be touched.

The pilot flame length should be as shown in diagram 6.4.

Turn the control thermostat knob to “O” and isolate the boiler from the electrical supply.

Fit the combustion chamber front.

Reconnect the ignition lead to the PCB.

Stick the self adhesive arrow indicator to the data label, against the rating that the boiler is going to be set to, for future reference. The arrow is in the loose items pack.

Loosen the main burner pressure test point screw and connect a suitable pressure gauge, see diagram 6.2.

Make sure that any remote controls are calling for heat.

Switch on/connect the electrical supply to the boiler and heating system, neon 1 will light.

6.4 Testing - Electrical

Turn the boiler thermostat knob fully clockwise to the maximum setting, which is about 82°C (180°F), neon 2 will light.

The lighting sequence is automatic as follows:-

The fan operates
The spark ignition operates
The pilot solenoid opens
The pilot burner lights
} neon 3 will light

The ignition spark stops
The main solenoid opens
} neon 4 will light

and after a short period of time the main burner will light, look through viewing window, see diagram 6.3.

Very cold weather may delay the operating sequence.

The main burner will stay alight until switched off, either by the control thermostat or a remote system control.

To make sure that the flame supervision device is working correctly the following should be done.

1. With the main burner alight, turn the gas service cock “Off”, see diagram 6.1.

After a short period the main burner and pilot will go out.

2. The correct working of the flame supervision device is shown by neon 4 going out within 10 seconds and the ignition starting up.

Neons 1, 2 and 3 should stay alight.

3. If the above does not happen, refer to fault finding Section 9.1.

4. To carry on turn the gas service cock “On”, see diagram 6.1.

When the boiler switches “Off”, both the pilot and main burner go out. The automatic lighting sequence will work again when heat is required.

If an external control switches the boiler off, the pump will run on for a predetermined time.

6.5 Testing - Gas

With the boiler on proceed as follows:-

Test for gas soundness around the boiler gas components using a suitable leak detection fluid, in accordance with the current issue of BS6891.

Check the main burner gas pressure at least 10 minutes after the boiler has lit, refer to Data Label.

If necessary adjust the gas pressure to obtain the required setting turning screw clockwise, to decrease pressure, see diagram 6.2.

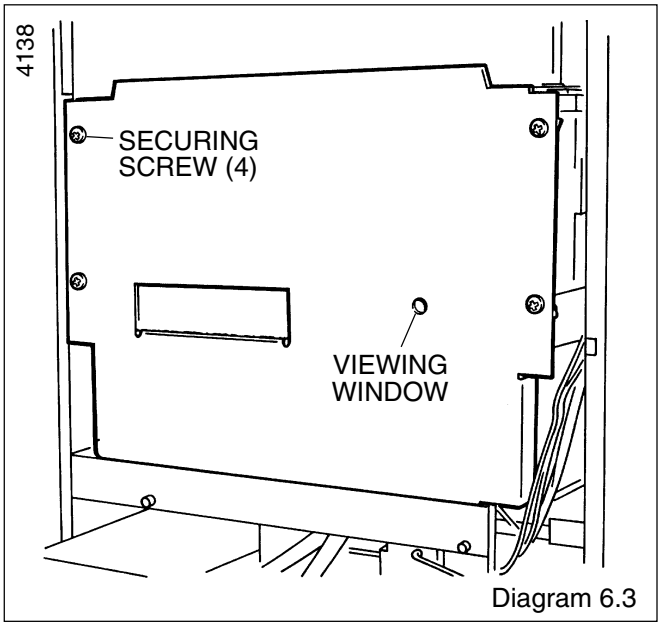

Diagram 6.3

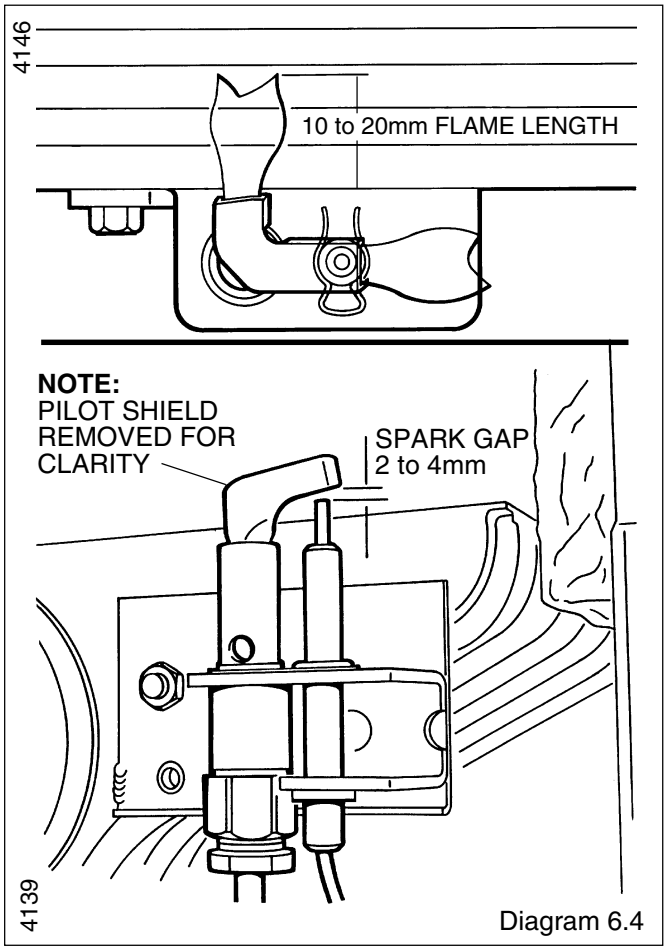

Diagram 6.4

Should any doubt exist about the gas rate, check it using the gas meter test dial and stop watch, at least 10 minutes after the burner has lit, making sure that all other gas burning appliances and pilot lights are off.

Turn the control thermostat knob fully anticlockwise to “Off”. Remove the pressure gauge from the test point and refit screw, making sure a gas tight seal is made.

When the control thermostat is turned to the “Off” position, by hand, wait at least 30 seconds before turning “On” again.

There may be an initial smell given off from the boiler when new, this is quite normal and it will disappear after a short period of time.

Refit the electrical controls box, see diagram 5.8.

NOTE: The neon indicator lights on the printed circuit board are an aid to fault finding, for details refer to Section 9.

6.6 Testing - Open Vented System

Allow the system to reach maximum working temperature and examine for water leaks.

There should be no undue noise in the system and no pumping over of water or entry of air at the open vent above the feed and expansion cistern.

All systems -

The boiler should then be turned off and the system drained off as rapidly as possible, whilst still hot.

6.7 Adjustment - Fully Pumped Open Vented and Sealed Water Systems

When commissioning the system the boiler should first be fired with the bypass fully closed on full service, that is, central heating and domestic hot water. Adjust the pump to the system design setting then balance the system. Having achieved a satisfactory condition operate the boiler with the bypass fully closed on minimum load, normally this will be central heating only with one radiator in the main living area operating. The bypass valve should be gradually opened to achieve a temperature difference no greater than 20°C between the flow and return.

UNDER NO CIRCUMSTANCES SHOULD THIS VALVE BE LEFT IN THE FULLY CLOSED POSITION.

6.8 Sealed Water Systems ONLY

Adjust the system to initial design pressure.

The set pointer on the pressure gauge should be set to coincide with the indicating pointer.

6.9 Thermostatic Radiator Valves

If thermostatic radiator valves are fitted care must be taken to ensure that an adequate flow rate through the boiler when they close, refer to the current issue of BS7478 for guidance.

6.10 Protection Against Freezing

If the boiler is to be out of use for a period of time during severe weather conditions we recommend that the whole of the system, including the boiler, be drained off to avoid the risk of freezing up.

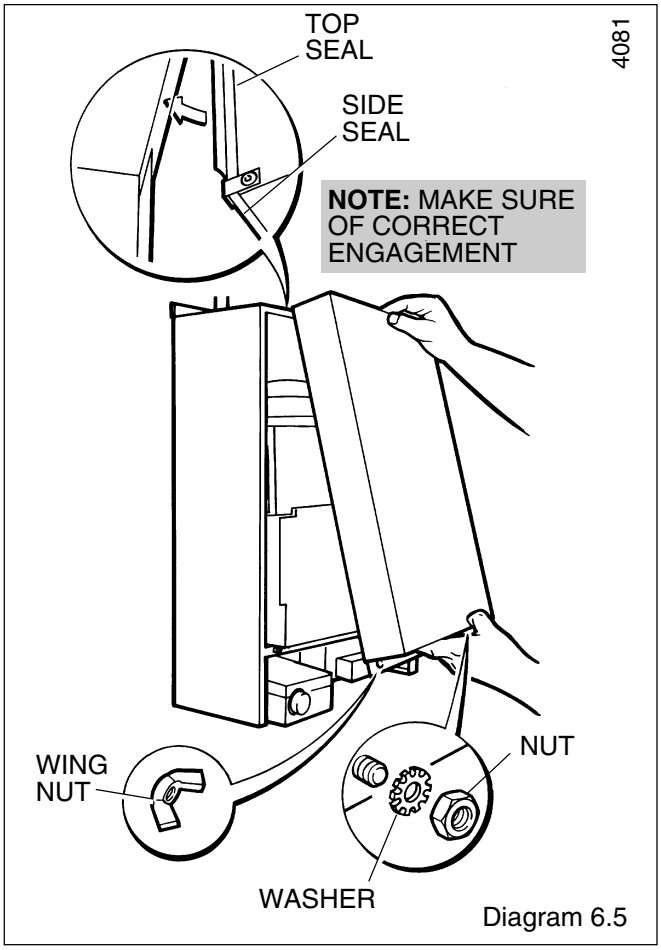

Diagram 6.5

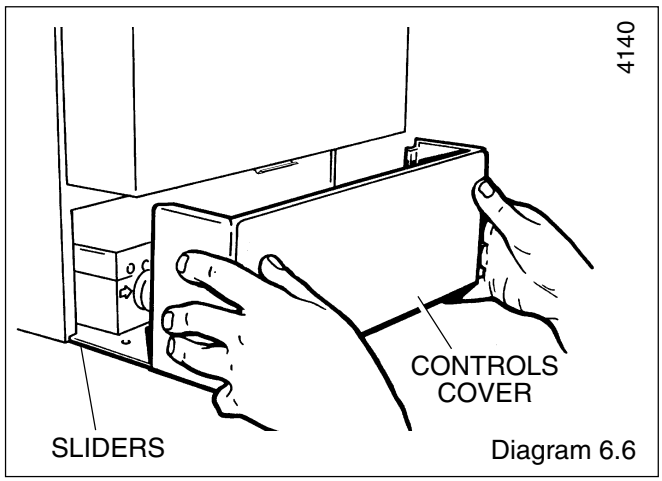

Diagram 6.6

6.11 Operational Checks and Completion

Adjust the boiler thermostat and any system controls to their required settings.

Do not attempt to adjust the thermostat calibration screw.

Operate the boiler again on full service and check that the balancing is satisfactory, making adjustments as necessary.

Fit the front cover by hooking it under at the top and securing with the wing nut, washer and nut previously removed, see diagram 6.5

Fit the controls cover by hooking into the sliders and pushing it back as far as it will go, see diagram 6.6.

Testing Flue Gases: If any doubt exists that the flue products are not exhausting correctly, investigate by use of a gas analyser (FGA).

7 Instructions to the User

Instruct and demonstrate the safe and efficient operation of the boiler, heating system and domestic hot water system.

Advise the user, that to ensure the continued efficient and safe operation of the boiler it is recommended that it is checked and serviced at regular intervals. The frequency of servicing will depend upon the particular installation and usage, but in general once a year should be enough.

Draw attention, if applicable, to the current issue of the current issue of the Gas Safety (Installation and Use) Regulations, Section 35, which imposes a duty of care on all persons who let out any property containing a gas appliance.

It is the Law that servicing is carried out by a **competent person**.

Advise the user of the precautions necessary to prevent damage to the system and building in the event of the heating system being out of use during frost and freezing conditions.

Reminder - Leave these instructions and the “Benchmark” logbook with the user.

For IE, it is necessary to complete a "Declaration of Conformity" to indicate compliance to I.S.813. An example of this is given in the current edition of I.S.813.

8 Servicing

REMEMBER: When replacing a part on this appliance, use only spare parts that you can be assured conform to the safety and performance specification that we require. Do not use reconditioned or copy parts that have not been clearly authorised by Saunier Duval.

NOTES: To ensure the continued efficient and safe operation of the boiler it is recommended that it is checked and serviced as necessary at regular intervals. The frequency of servicing will depend upon the particular installation conditions and usage, but in general once a year should be enough.

It is the Law that any servicing is carried out by a **competent person**.

Before servicing turn off the gas and isolate the electrical supply to the boiler.

After completing a service always test for gas soundness and carry out functional check on controls.

Unless stated otherwise all parts are replaced in the reverse order to removal.

8.1 Access

Refer to diagram 6.6 and slide the controls cover forwards and off.

Remove the outer case, see diagram 6.5.

NOTE: As an aid to Servicing the air pressure switch tube connection can be used to obtain a products of combustion reading.

Remove the RED tube from the connection on the air pressure switch and insert the analyser probe into the tube.

Switch on the electrical supply to operate the fan and turn on the gas supply.

On completion of the test switch off the electrical supply and the gas supply and reconnect the red tube to the air pressure switch.

8.2 Cleaning Heat Exchanger Flueways

Disconnect the air pressure tubes see diagram 5.4.

Remove the blue and red electrical connections from the fan see diagram 5.4.

Remove the fan complete with the fan duct extension, taking care not to damage the gasket, see diagram 5.4 and 5.7.

Remove the flue hood, noting that there are keyhole slots at the rear, see diagram 8.1.

Remove the combustion chamber cover.

Remove the burner as Section 8.3.

Place a sheet of paper in the base of the combustion chamber.

Remove the baffles, see diagram 8.2.

Clean the heat exchanger flueways with a suitable stiff brush.

Remove the paper together with any debris.

8.3 Main Burner

Disconnect the pilot pipe union connector.

Remove the pilot burner securing nut and shakeproof washer, together with the pilot shield.

Remove the pilot burner assembly taking care not to damage the electrode and lead assembly, see diagram 8.3.

Remove the wing nut from the burner support bracket, see diagram 8.4.

Remove the main burner from the main injector at the rear. Raise the burner up and forward, easing the pilot pipe down, to

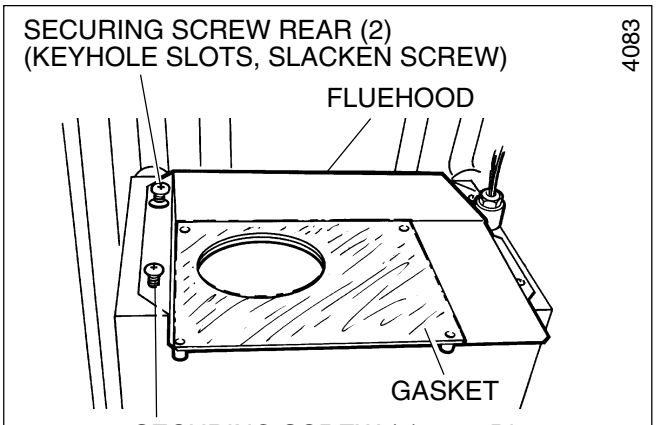

Diagram 8.1

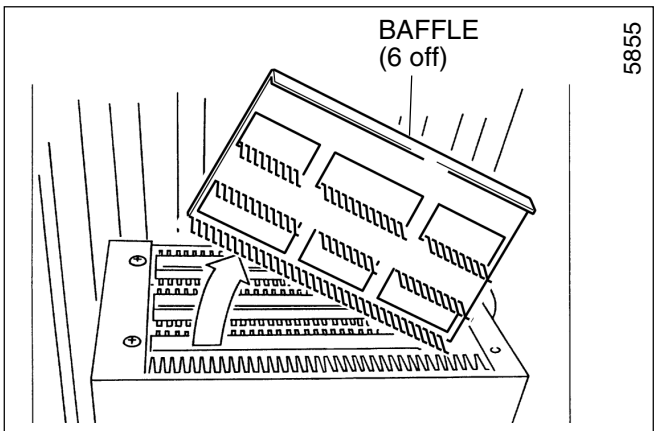

Diagram 8.2

clear, take care not to damage the combustion chamber insulation or the pilot burner assembly.

Use a vacuum cleaner or suitable stiff brush to clean the burner thoroughly, making sure that all the burner ports are clear and unobstructed.

NOTE: On refitting and after cleaning the heat exchanger make sure the main burner is fitted correctly, that is, located on the main injector and horizontal.

8.4 Main Injector

With the main burner removed the main injector can be inspected and cleaned as necessary, see diagram 8.5.

If removing for cleaning do not use a wire or sharp instrument on the hole.

Use a little suitable sealant on the external thread when refitting to make sure a gas tight seal is made.

8.5 Pilot Burner/Electrode and Pilot Injector

Clean the pilot burner and electrode.

To remove the electrode release the spring clip, see diagram 8.6.

When removing and replacing the pilot injector from the pilot burner take care not to damage the electrode, see diagram 8.6, clean the injector by blowing through it.

Check that the spark gap is as shown in diagram 6.4.

8.6 Operational Checks

After completing a service and before fitting the case, check condition of the case seal and renew if necessary.

Examine flue hood and terminal to make sure they are clean and clear of obstructions.

Testing Flue Gases: If any doubt exists that the flue products are not exhausting correctly, investigate by use of a gas analyser (FGA).

Light the boiler and carryout the functional checks as described in Section 6.

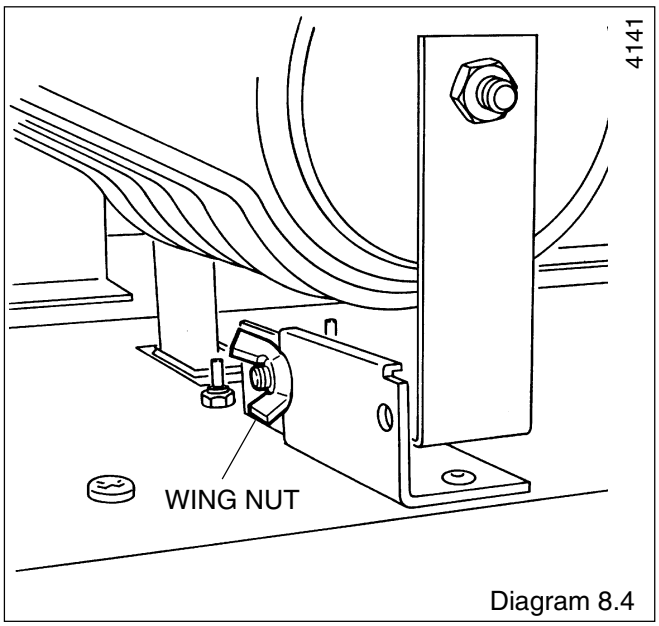

Diagram 8.4

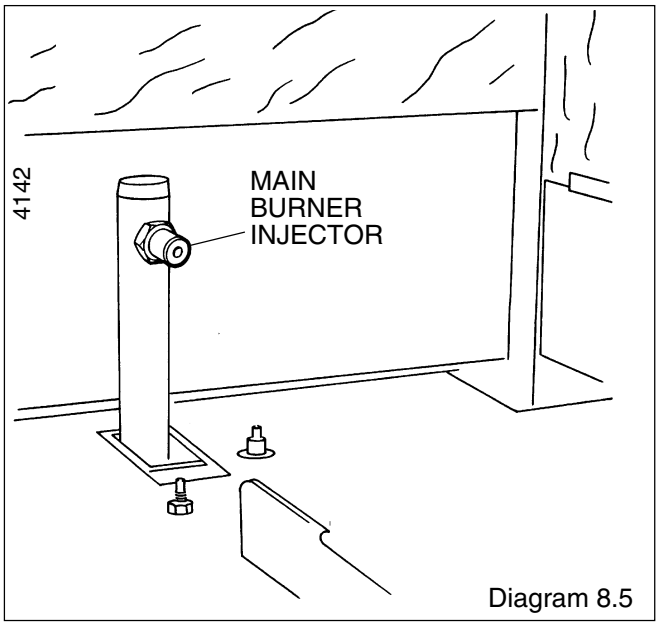

Diagram 8.5

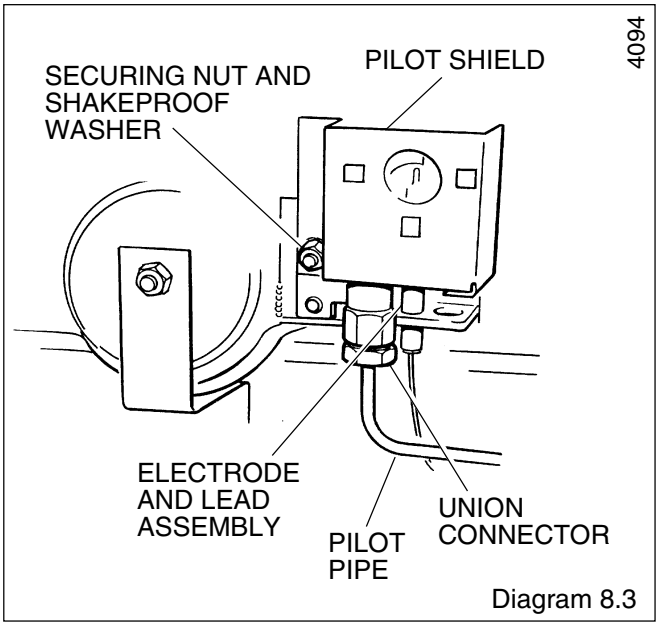

Diagram 8.3

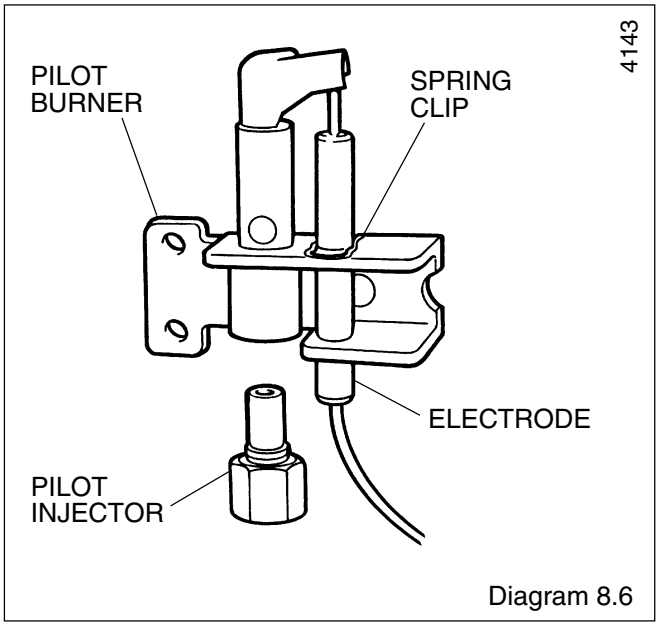

Diagram 8.6

9 Fault Finding

9.1 Electrical

IMPORTANT: On completion of the Service/Fault Finding task which has required the breaking and remaking of the electrical connections the earth continuity, polarity, short circuit and resistance to earth checks must be repeated using a suitable multimeter.

Refer to neon indicators “An Aid to Fault Finding” diagram 9.1, Boiler Fault Finding diagram 9.2, Pump Overrun Fault Finding diagram 9.3 the Functional Flow diagram 9.4, Gravity Domestic Hot Water and Fully Pumped Central Heating, diagram 9.5, Fully Pumped Open Vented or Sealed Water System, the Pictorial Wiring diagram 9.6, Gravity Domestic Hot Water and Fully Pumped Central Heating and diagram 9.7 Fully Pumped Open Vented or Sealed Water System.

9.2 Electrical Supply Failure

Failure of the electrical supply will cause the burner to go out.

Operation will normally resume on the restoration of the electrical supply. If the burner does not relight after an electrical supply failure the overheat device may need resetting.

Remove the control cover, see diagram 6.6 and push the reset button on the front of the control box, see diagram 6.1.

If the cutoff operates at any other time press the reset button and the burner should relight.

If the fault persists refer to fault finding chart.

NOTE: the pump may run for several minutes when power is first applied, regardless of a call for heat.

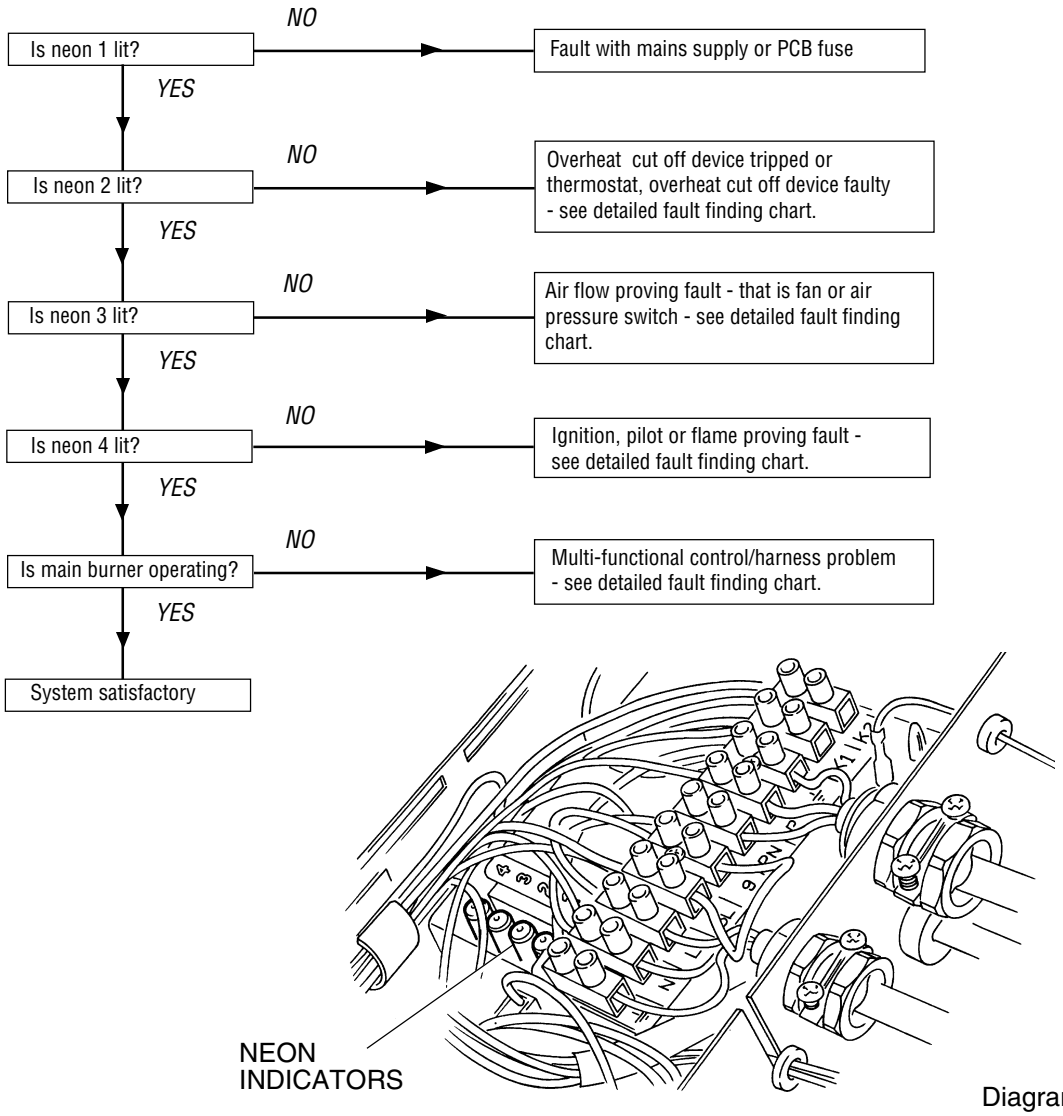

Diagram 9.1

Before detailed checking of electrical components ensure that remote controls are calling for heat. Check the gas supply is free of obstructions and purged of air. Check the overheat cutoff has not operated, for fully pumped systems only. Isolate the electrical supply and physically check ALL cables, connections and the printed circuit board fuse. Check the air tubes to the air pressure switch. Switch on the electrical supply and check for correct polarity. Turn the boiler thermostat to its maximum setting. Also check fuses.

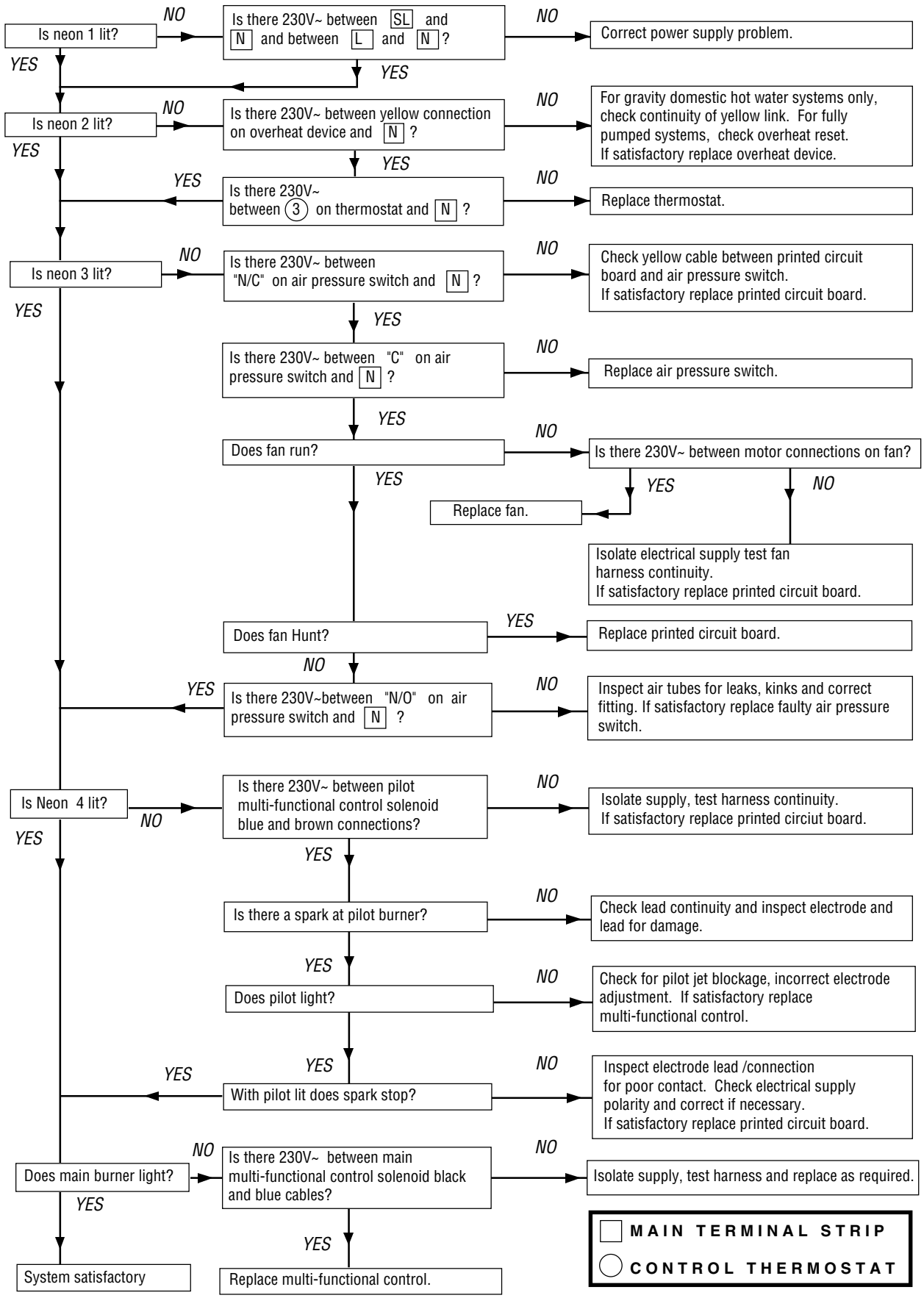

Diagram 9.2

Pump Overrun Operation For Fully Pumped System Only

The PCB has a timed pump overrun facility.
The pump should run for several minutes after remote controls have stopped calling for heat.
Before using the fault finding chart ensure all wiring is correct and in good condition, the pump is not faulty and check the PCB fuse F2

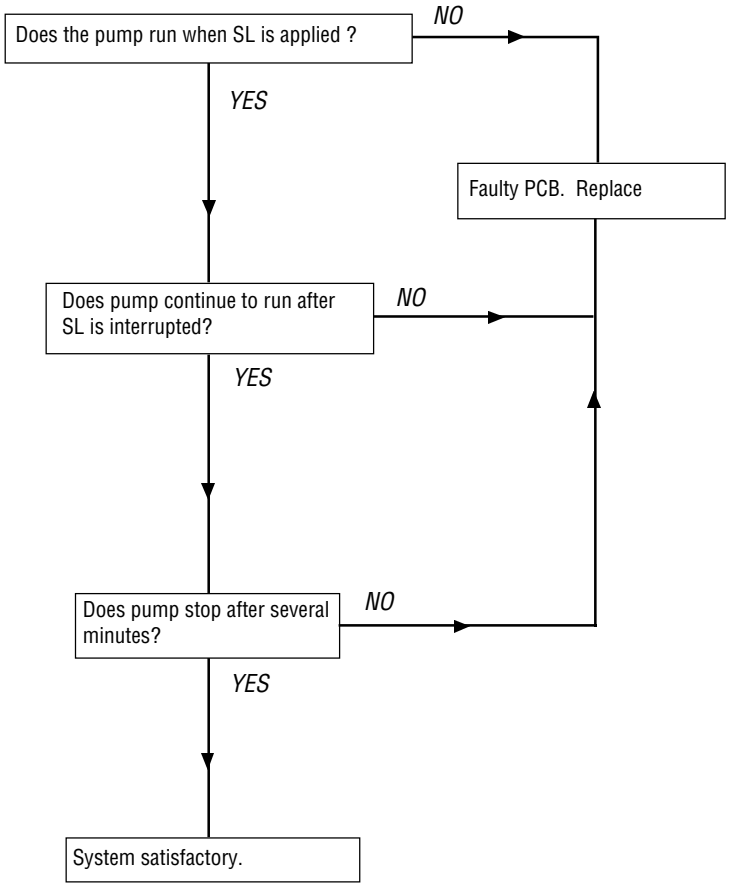

FOR FULLY PUMPED OPEN VENTED OR SEALED WATER SYSTEMS ONLY

Diagram 9.3

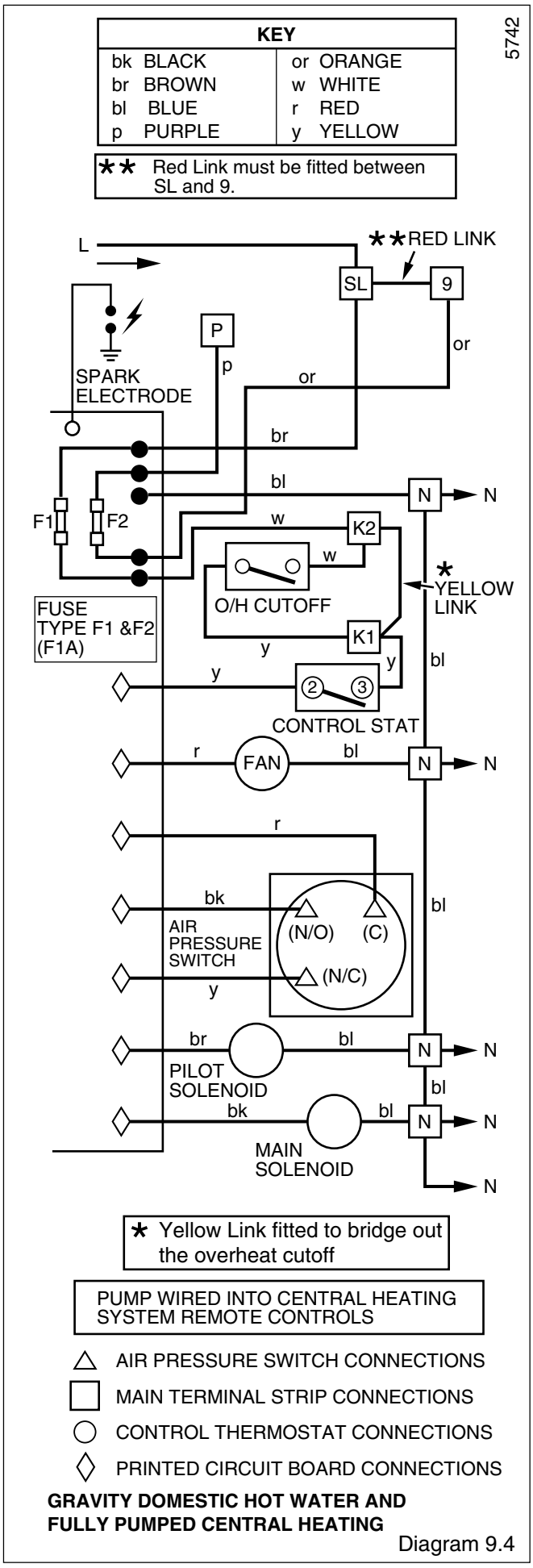

GRAVITY DOMESTIC HOT WATER AND FULLY PUMPED CENTRAL HEATING

Diagram 9.4

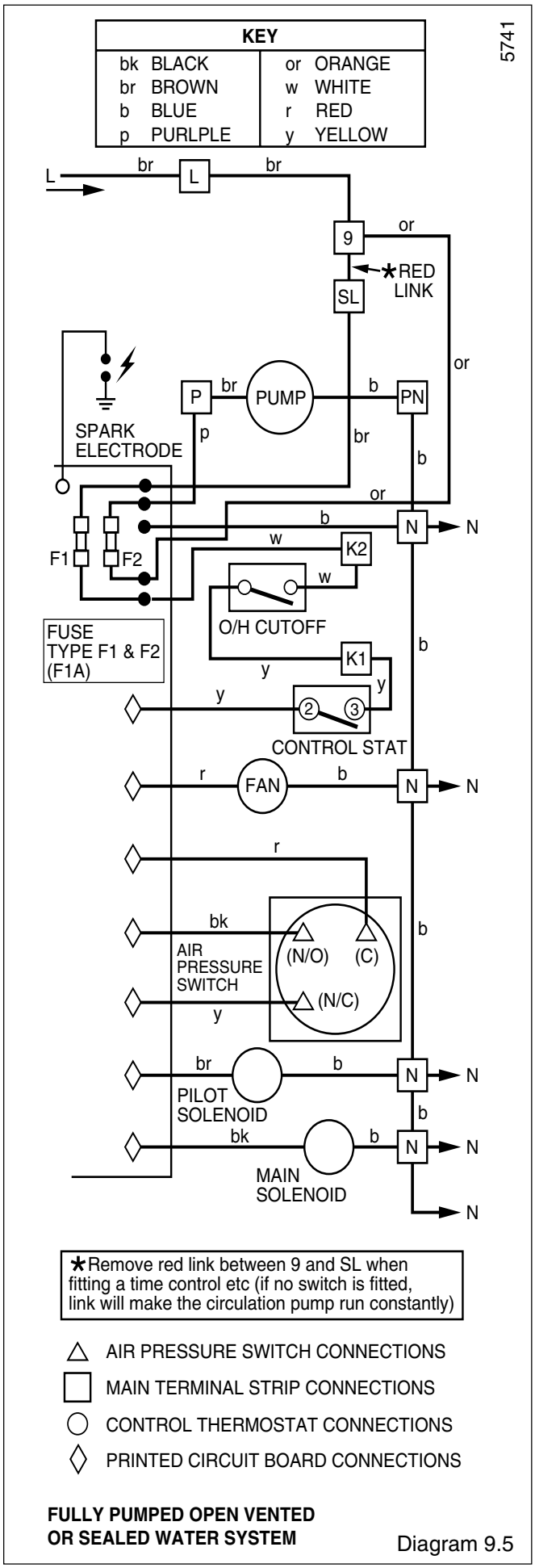

FULLY PUMPED OPEN VENTED OR SEALED WATER SYSTEM

Diagram 9.5

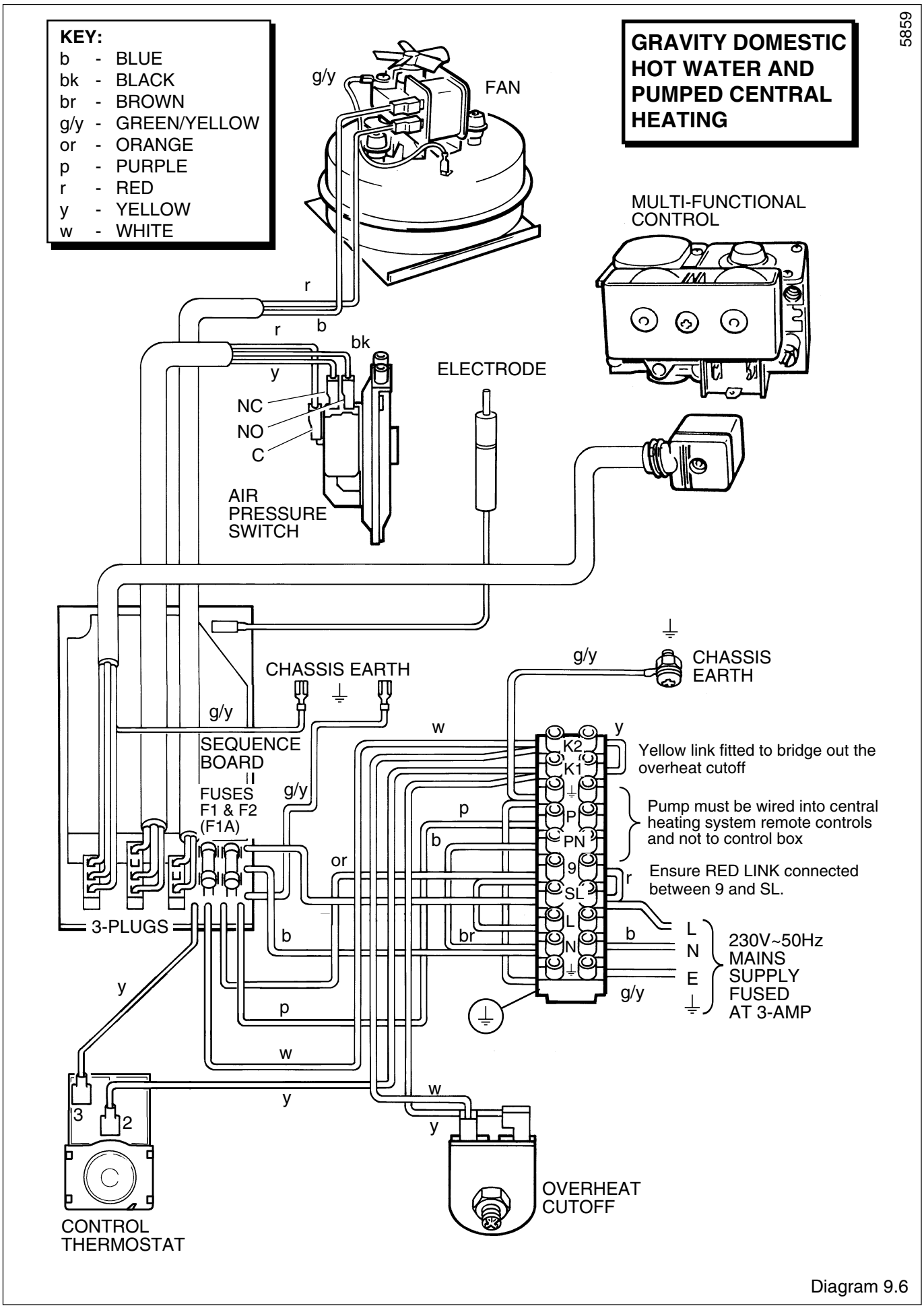
KEY:
b - BLUE
bk - BLACK
br - BROWN
g/y - GREEN/YELLOW
or - ORANGE
p - PURPLE
r - RED
y - YELLOW
w - WHITE
GRAVITY DOMESTIC HOT WATER AND PUMPED CENTRAL HEATING
5859
FAN
g/y
MULTI-FUNCTIONAL CONTROL
r
b
bk
y
ELECTRODE
NC
NO
C
AIR PRESSURE SWITCH
CHASSIS EARTH
g/y
CHASSIS EARTH
SEQUENCE BOARD
FUSES F1 & F2 (F1A)
3-PLUGS
w
y
K2
K1
Yellow link fitted to bridge out the overheat cutoff
p
P
PN
Pump must be wired into central heating system remote controls and not to control box
b
or
9
r
SL
Ensure RED LINK connected between 9 and SL.
L
N
br
b
L
N
E
230V~50Hz MAINS SUPPLY FUSED AT 3-AMP
g/y
y
p
w
3
2
y
w
y
CONTROL THERMOSTAT
OVERHEAT CUTOFF

Diagram 9.6

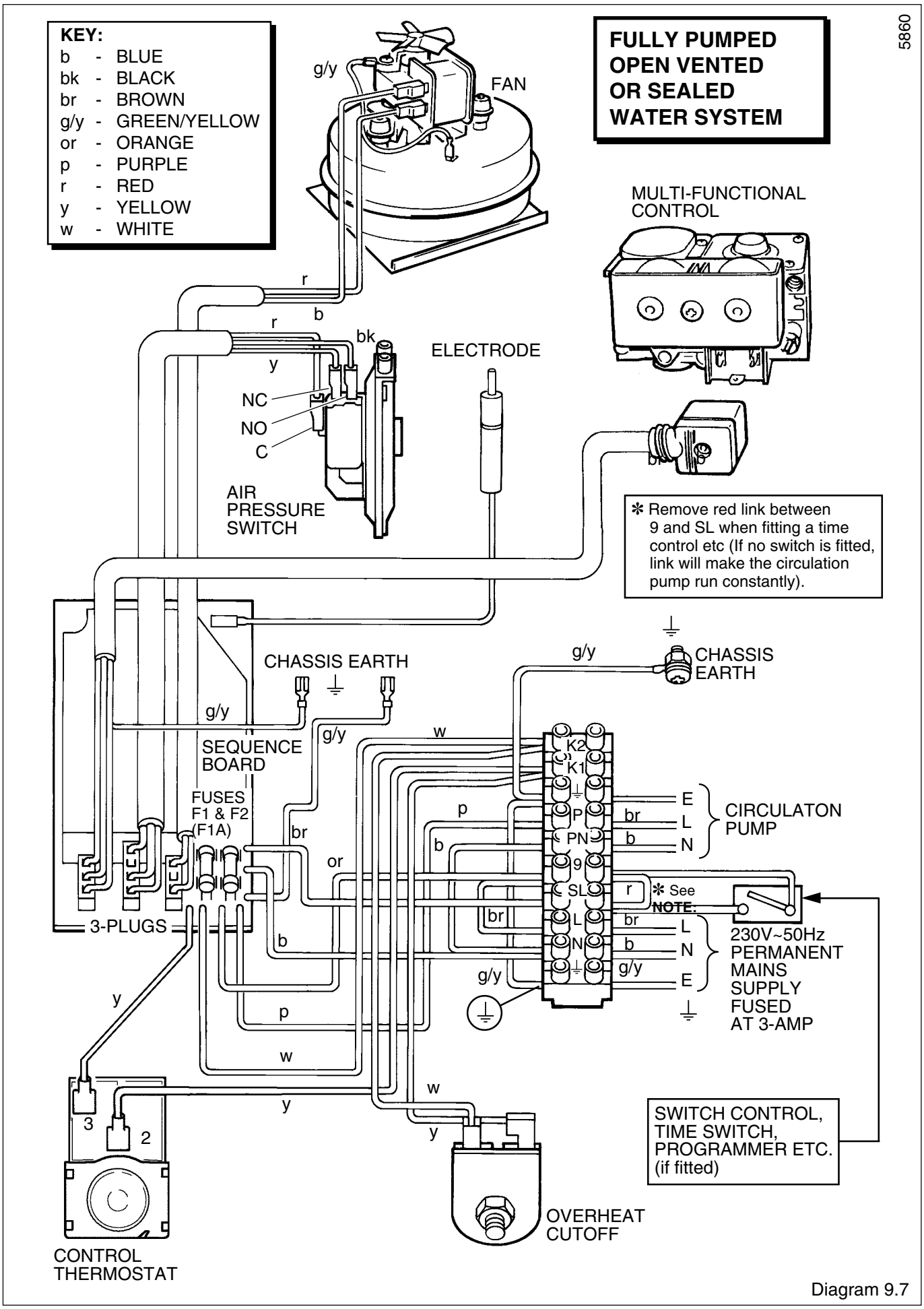
KEY:
b - BLUE
bk - BLACK
br - BROWN
g/y - GREEN/YELLOW
or - ORANGE
p - PURPLE
r - RED
y - YELLOW
w - WHITE
FULLY PUMPED OPEN VENTED OR SEALED WATER SYSTEM
5860
FAN
g/y
MULTI-FUNCTIONAL CONTROL
ELECTRODE
NC
NO
C
AIR PRESSURE SWITCH
* Remove red link between 9 and SL when fitting a time control etc (If no switch is fitted, link will make the circulation pump run constantly).
CHASSIS EARTH
CHASSIS EARTH
SEQUENCE BOARD
FUSES F1 & F2 (F1A)
3-PLUGS
K2
K1
P
PN
9
SL
L
N
E
L
N
CIRCULATON PUMP
* See NOTE:
230V~50Hz PERMANENT MAINS SUPPLY FUSED AT 3-AMP
SWITCH CONTROL, TIME SWITCH, PROGRAMMER ETC. (if fitted)
OVERHEAT CUTOFF
CONTROL THERMOSTAT
3
2

Diagram 9.7

NOTE: Replacement of parts must only be carried out by a **competent person**.

Before replacing any parts isolate the boiler from the electrical supply and turn the gas supply off at the gas service cock, indicator slot to be vertical.

Unless stated otherwise, all parts are replaced in the reverse order to removal.

After replacing any parts always test for gas soundness and if necessary carryout functional check of controls.

10.1 Access

Gain Access as Section 8.1.

10.2 Control Thermostat - diagram 10.1 and 10.2

Remove and support the electrical control box, refer to Section 5.6.

Remove the control knob. Remove the electrical connections from the thermostat body.

Release the thermostat body by unscrewing the two screws and shakeproof washers in the front of the control box.

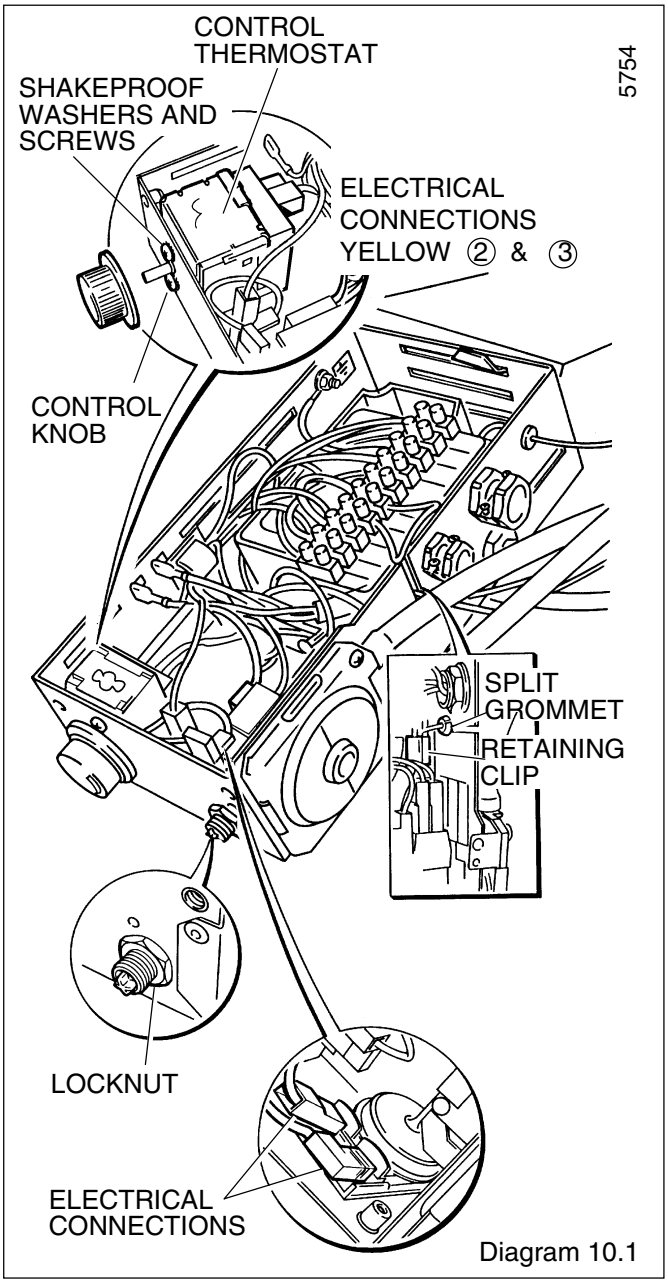

Diagram 10.1

Remove the split pin and withdraw the thermostat phial from its pocket. Release the capillary from the base and plastic retaining clip then remove it from the split grommet.

Release the capillary from its clips.

Remove the thermostat complete from the boiler.

Re-assembly **NOTE:** When fitting the thermostat, make sure that the thermostat phial is covered with heat sink compound and then fully inserted into the phial pocket and that the capillary is within the gland seal, see diagram 10.2. Remake the electrical connections.

There must be no kinks or sharp bends in the capillary.

10.3 Over Heat Cutoff Device - diagram 10.1, 10.2 and 10.2A.

Release the control box as Section 5.6.

Remove the overheat cutoff electrical connections.

Disconnect the air pressure switch plug from the PCB.

Remove the locking nut from the overheat cutoff.

Release the capillary from the retaining clips then remove it from the split grommet.

Slacken the bracket and remove the phial from the pipe.

When refitting use the heat sink compound provided and make sure that the phial is correctly fitted into the groove on the pipe.

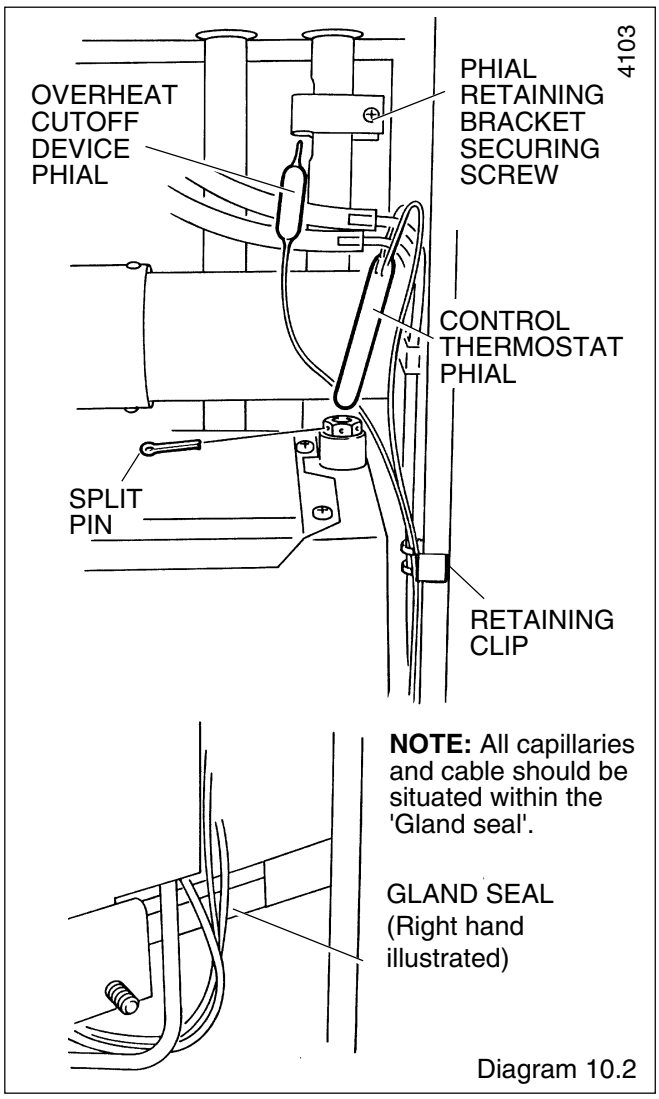

Diagram 10.2

10.4 Control Board (PCB) diagram 10.2A

Release the control box, refer to Section 5.6.

Disconnect the three electrical plugs and ignition lead.

Release the cables from the plastic retaining clip, then disconnect the cables from the PCB to the main terminal strip, control thermostat and earth connection.

Release the main terminal strip and plastic label.

Carefully pull the board away from its supports.

When refitting refer to wiring diagram 9.6 or 9.7 as appropriate.

10.5 Pilot Burner and Pilot Injector

Proceed as Section 8.3 and 8.5.

10.6 Electrode

Proceed as Section 8.3 and 8.5.

Gain access as Section 5.6 to remove lead from control box.

10.7 Multifunctional Control - diagram 10.3

Disconnect the pilot supply by unscrewing the tubing nut at the multifunctional control, take care as there is a restrictor on the pilot pipe.

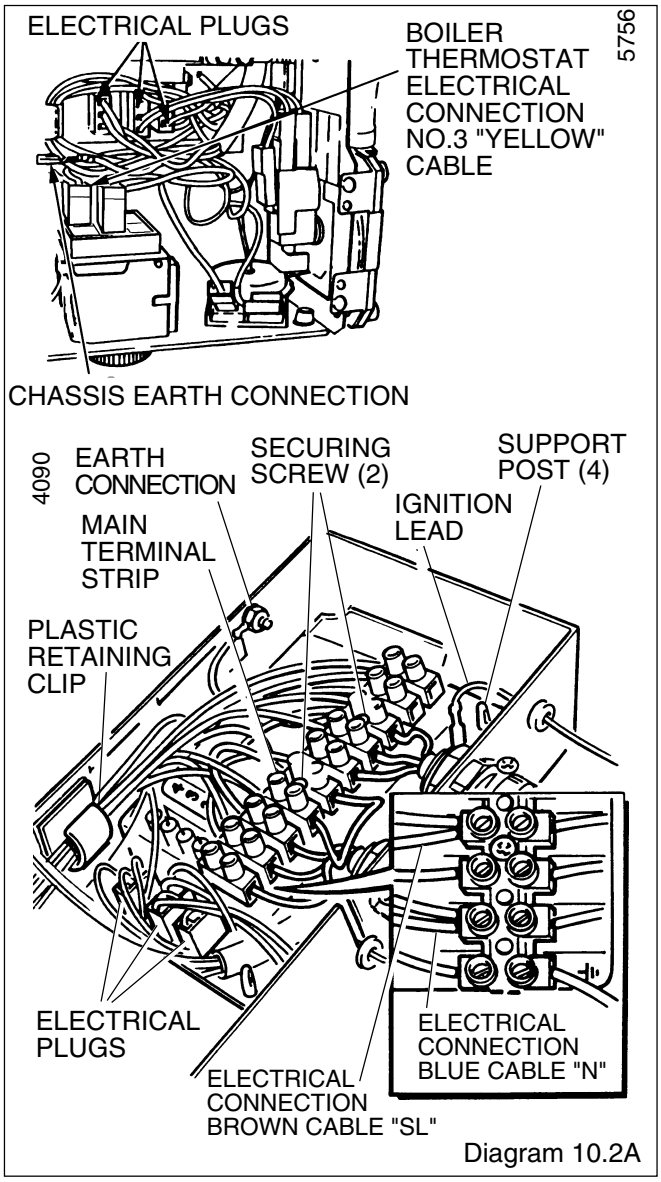

Diagram 10.2A

Disconnect the electrical plug.

Support the multifunctional control, remove the four extended screws from the flanged connections at the left and right hand side.

Remove and discard the original “O” rings from the flanged connections and fit the new “O” ring supplied, into recess, before fitting the replacement multifunctional control.

After assembly test for gas soundness and purge in accordance with the current issue of BS6891 or in IE, the current edition of I.S.813 "Domestic Gas Installations".

10.8 Solenoid - diagram 10.3

Remove the electrical plug from the multifunctional control. Remove the securing screw and then the solenoid Assembly.

10.9 Main Burner

Remove the main burner as Section 8.3.

10.10 Main Injector

Remove the main burner as Section 8.3.

Remove the main injector as Section 8.4.

10.11 Insulation - diagram 10.5

Combustion Chamber Front

Remove the retaining screw then the insulation.

Sides

Slide the insulation out.

Rear

With the side insulation removed the rear insulation can be removed and replaced.

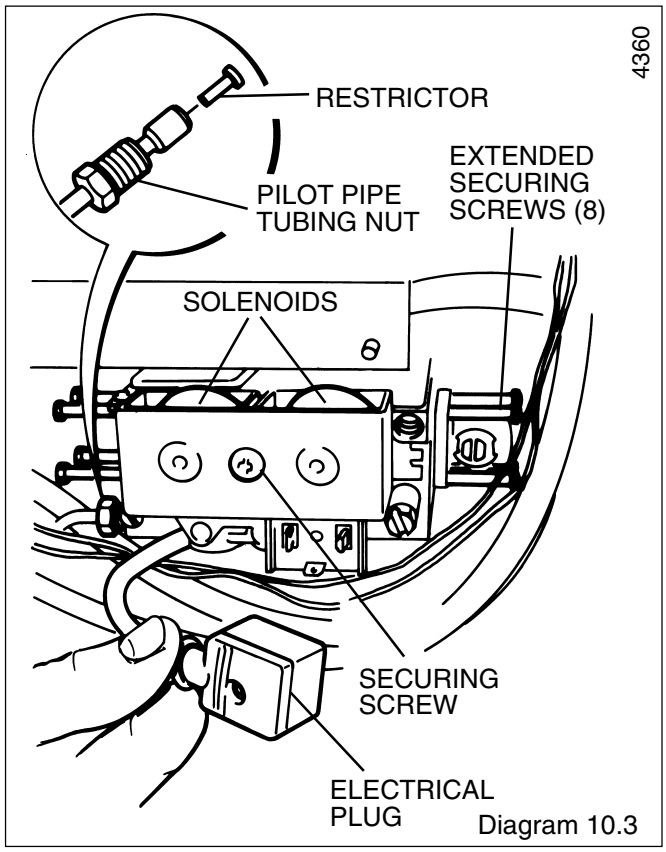

Diagram 10.3

10.12 Viewing Window - diagram 10.6

Remove the old self adhesive aluminium foil gasket and the old mica window. Replace with a new mica window. Peel off the backing paper and secure with new self adhesive aluminium foil gasket, see diagram 10.6. Ensure no air bubbles are trapped underneath the foil.

IMPORTANT

Make sure that the mica window fully covers the opening and that the hole in the aluminium foil gasket is centred over opening.

10.13 Air Pressure Switch - diagram 10.7

Release the control box as Section 5.6.

Remove the air pressure tubes and electrical connections from the PCB, release the screws and remove the switch.

When fitting the replacement make sure that the plastic tubes are fitted as shown in diagram 10.7 and that electrical connections are made as shown in diagrams 9.6 or 9.7.

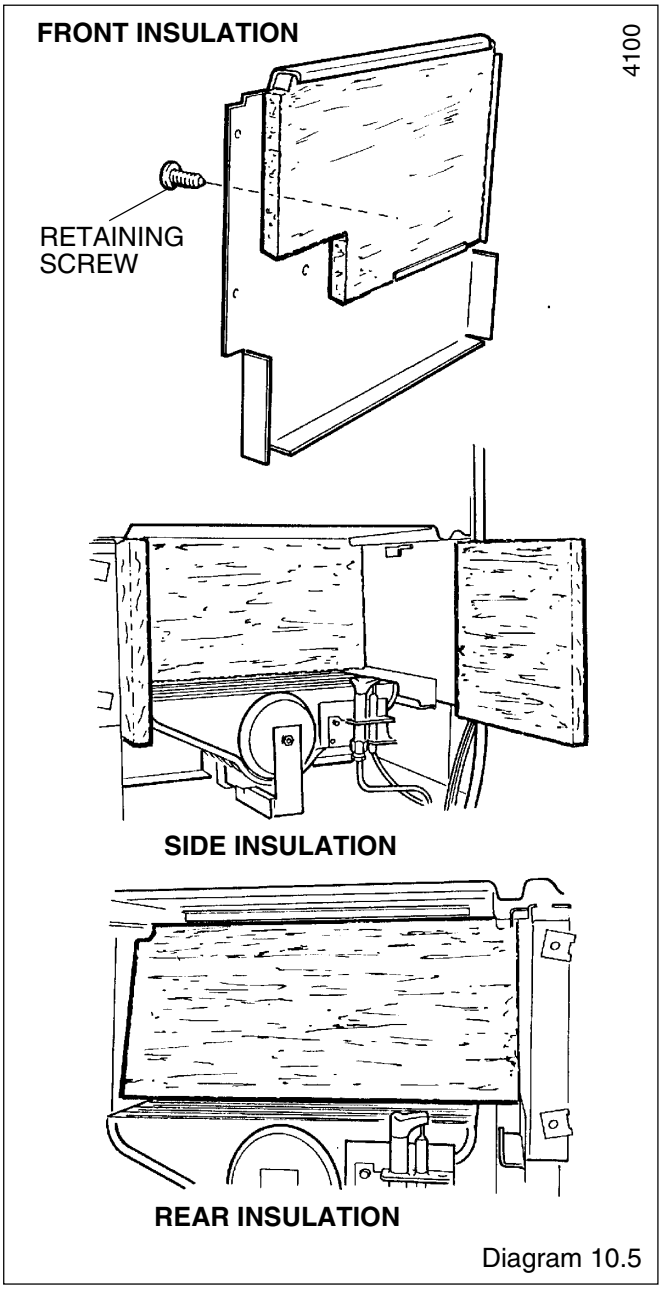

Diagram 10.5

10.14 Fan - diagram 5.4

Remove the electrical connections and disconnect the air tubes.

Remove the fan assembly securing screws at the front and slacken those at the rear and withdraw the assembly.

Make sure that the earth connection is remade onto the new fan assembly.

The polarity of the other connections is not important.

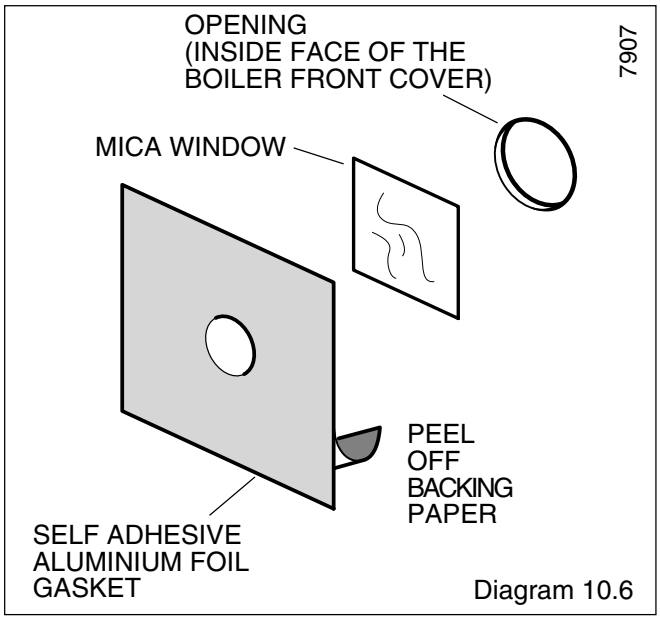

Diagram 10.6

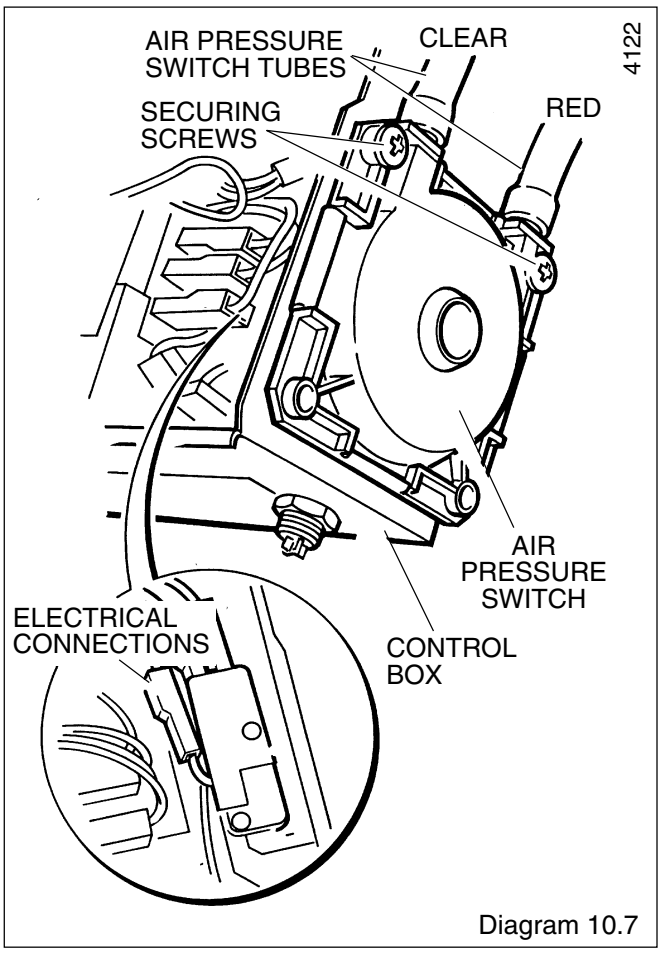

Diagram 10.7

11 Spare Parts

11.1 Part Identification

The key number on the diagram and the list will help to identify the part.

11.2 Ordering

When ordering any spare parts please quote the number and description from the list together with the model name and serial number.

If ordering from British Gas also quote the GC number of the appliance and part.

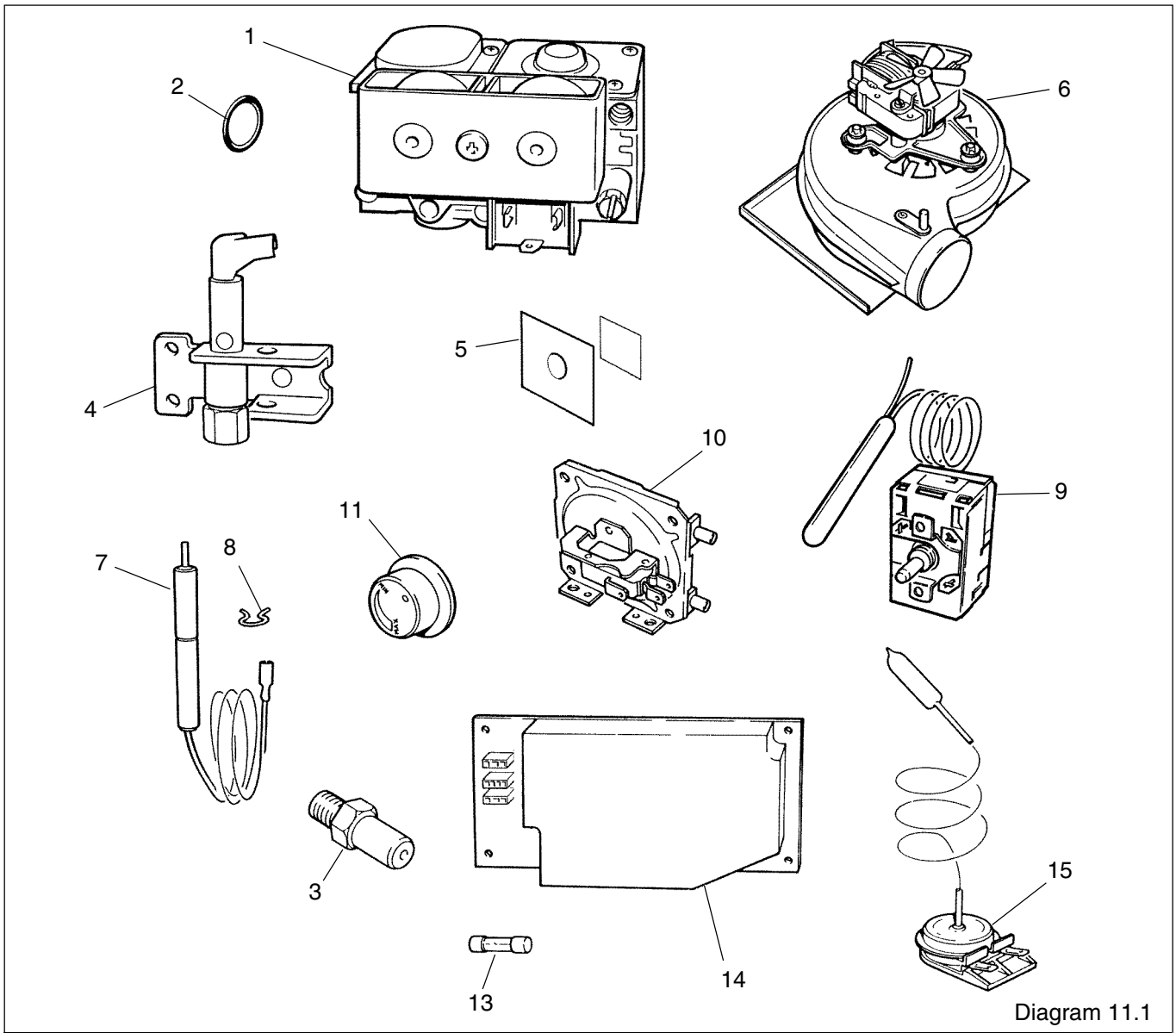

Diagram 11.1

Key No	Part No	Description	GC Part No
1	801020	Multifunctional control	E25264
2	208040	“O” ring	334 592
3	203096	Injector - 50ff	313 305
4	203431	Pilot burner	379 204
5	801236	Mica window & Gasket	******
6	800432	Fan assembly - 50ff	278 000
7	202626	Spark electrode and lead	313 998
8	K3580	Clip	390 983
9	800849	Thermostat - control - 50ff	******
10	202201	Air pressure switch	313992
11	800400	Control knob	313917
13	202015	Fuse	334750
14	900847	Control board (PCB)	******
15	800272	Thermostat cut-off	313 606

Because of our constant endeavour for improvement, details may vary slightly from those shown in these instructions.